Energy Best Practices Guide

WATER & WASTEWATER INDUSTRY

focus on energy®

Partnering with Wisconsin utilities

Water & Wastewater Industry Energy Best Practices Guidebook

FOCUS ON ENERGY®, Wisconsin utilities' statewide program for energy efficiency and renewable energy, helps eligible residents and businesses save energy and money while protecting the environment. Focus on Energy information, resources, and financial incentives help to implement energy efficiency and renewable energy projects that otherwise would not be completed.

Brought to you by:

focus on energy®
Partnering with Wisconsin utilities

©2024 Wisconsin Focus on Energy

Table of contents

Introduction

Energy use in water treatment and distribution systems 4
Energy use in wastewater treatment and collection systems 5
Energy baseline 8
Energy benchmarks 9

Energy management

Program development 11
Understanding goals 11
Building a program 12
Basic steps in building an energy management program 13
Constraints 25

Best practices

General best practices 26
Water treatment best practices 59
Wastewater best practices 71
Building best practices 103

Appendices

Baseline energy use and key performance indicators (kpi) 116
Understanding your utility bill 120
Economic evaluation process 125
Small utility energy management checklists 129
Additional resources 144

Introduction

The primary goal of the water and wastewater industry has always been environmental stewardship to meet applicable water-quality standards. The industry has focused on earning and maintaining public trust by protecting the health and welfare of its communities. For this reason, innovative and alternative technologies are approached cautiously within the industry and incorporating energy-efficient technologies and concepts into treatment processes is usually not a priority. This challenge is often compounded by a general lack of knowledge about energy use and billing. Energy costs are sometimes viewed as uncontrollable – a business cost which cannot be questioned or changed. However, if operation and management personnel become familiar with how their facility uses energy and is billed for it, they can find ways to manage and reduce energy costs.

The Best Practice Guide was developed to support the industry because of its potential to reduce energy use without compromising water-quality standards. Through the program, personnel have learned energy use can be managed with no adverse effects on water quality. The improvements are often economically attractive, compared to their industrial counterparts, due to longer hours of operation. These facilities are necessary public infrastructure and, therefore, have stable financial commitment for long-term viability.

Energy use in water treatment and distribution systems

Wisconsin consumes almost 400 million kilowatt hours per year to produce drinking water (about $34.1 million)[1]. Wisconsin's 581 drinking-water systems, like their wastewater counterparts, vary greatly in size and process components. The 98 largest systems account for nearly 79% of the energy used to treat water in Wisconsin, while the remaining 481 small facilities use nearly 21%. On average, water-treatment facilities spend 11% of their operating budgets on energy, according to the American Water Works Association Research Foundation (AWWARF)[2]. The table below presents the average energy use rates[1] for the various classes of drinking-water utilities in Wisconsin. It should be noted one-fourth of Wisconsin's drinking water utilities use less than 1.58 kWh per 1,000 gallons[1].

Table 1: Energy use rates at drinking-water utilities

TYPE	KWH/1,000 GALLONS
Class AB (>4,000 customers)	1.81
Class C (1,000-4,000 customers)	1.94
Class D (<1,000 customers)	2.41
Surface-water source (WI)	2.16
Ground-water source (WI)	2.01

[1] Wisconsin State Energy Office. (2015, November). Municipal Water Utility Benchmarking Analysis. Retrieved from WI SEO website http://www.stateenergyoffice.wi.gov/category.asp?linkcatid=3890&linkid=1844&locid=160.

[2] Manager's Guide for Best Practices for Energy Management, AwwaRF, 2003.

The magnitude of energy savings available depends on the type of treatment and delivery system in use, the age and condition of the equipment in use, and the capital available to implement major changes, if necessary. Surface-water treatment systems typically have more available energy savings than groundwater treatment systems because they require more equipment for treatment and have extended hours of operation. However, both have the potential to save significant amounts of energy due to the aging infrastructure of the industry. It is not unusual to find 40- and 50-year-old pumps, motors and controls still in use. More than 90% of energy consumed in producing and delivering drinking water is used for pumping.

Factors such as well recharge, maintenance and drawdown, local water quality, and national/local security are likely to increase the need for improved treatment technologies, including membrane filtration and ultraviolet irradiation. These technologies are typically more energy intensive than conventional treatment.

Energy use in wastewater treatment and collection systems

Wisconsin has approximately 650 public and 360 private wastewater treatment facilities. A summary of the public facilities' sizes is presented in Table 2 below. Approximately 85% of all facilities treat less than one million gallons per day (MGD). Although these facilities treat only 12% of the total flow, they use about 24% of the total energy needed to treat wastewater in the state, making them excellent candidates for energy efficiency projects. Due to the sheer size of the remaining larger facilities, even simple energy efficiency projects can lead to tremendous savings.

Table 2: Flow profile of Wisconsin wastewater facilities

MGD	NUMBER OF FACILITIES	PERCENTAGE OF FACILITIES	PERCENTAGE OF AVERAGE DESIGN FLOW	TOTAL AVERAGE DESIGN FLOW (MGD)
0 - 0.25	402	61.8	3.7	33.7
0.26 - 0.5	93	14.3	3.8	35.3
0.51 - 1.0	55	8.5	4.1	38.0
1.01 - 2.0	34	5.2	5.7	52.0
2.01 - 5.0	37	5.7	12.2	112.1
5.01 - 10.0	11	1.7	8.2	75.5
10.01 - 20.0	11	1.7	18.0	165.5
20.01 - 50.0	5	0.8	18.6	171.4
> 50	2	0.3	25.7	236
Total	650	100	100	919.5

Utility managers are concerned with how much of the utility's energy is consumed by water and wastewater facilities, which is around 35% for most utilities. Wastewater utility managers are concerned with how much of their operating budget is associated with electricity, which is normally 25 to 40%.

Table 3 shows the average energy use intensity for different types of wastewater treatment. Activated sludge treatment is broken down by flow range (MGD) and the energy use intensity indexed by millions of gallons of flow per day (MGD) and by biological oxygen demand (BOD). Because the cost of operating a wastewater facility is born by ratepayers, the energy intensity by population is also shown for comparison.

Table 3: Average energy use at Wisconsin wastewater facilities*

TREATMENT TYPE	FLOW RANGE (MGD)	NUMBER OF FACILITIES SURVEYED	KWH PER MILLION GALLONS	KWH PER 1,000 LBS. OF BOD	KWH PER 1,000 POPULATION EQUIVALENT
Activated Sludge**	0 -1	26	5,440	3,178	242,032
	1 - 5	14	2,503	1,426	88,465
	> 5	11	2,288	1,505	93,365
	All AS	51	3,954	2,258	162,934
Aerated Lagoon	0 - 1	15	7,288	4,232	262,569
Oxidation Ditch	0 - 1.2[a]	19	3,895	3,696	229,316

[1] Statewide Assessment of Energy Use by the Municipal Water and Wastewater Sector - New York State Energy Research and Development Authority, November 2008.

* The sample of facilities surveyed by Focus on Energy was not randomly selected and is not necessarily representative of all state facilities. The sampling included facilities who participated in Focus on Energy.

**"Activated sludge" refers to diffused aeration, as differentiated from aerated lagoons and oxidation ditches, which also rely on activated sludge treatment.

[a] Eighteen of these facilities are under 0.7 MGD; one facility was at 1.2 MGD.

Figures 1 and 2 show process flows for small and large wastewater systems. The Energy Management section discusses how to profile energy use at a facility based on equipment energy usage.

Figure 1: Small wastewater system process flow diagram

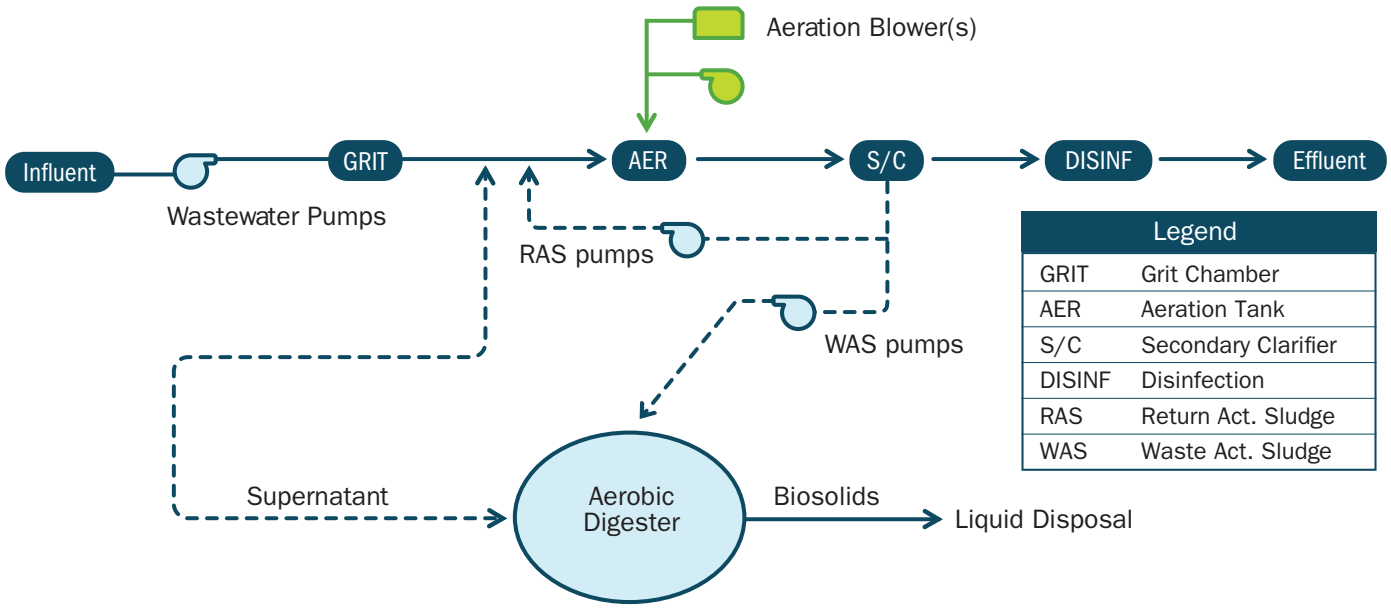

Figure 2: Large wastewater system process flow diagram

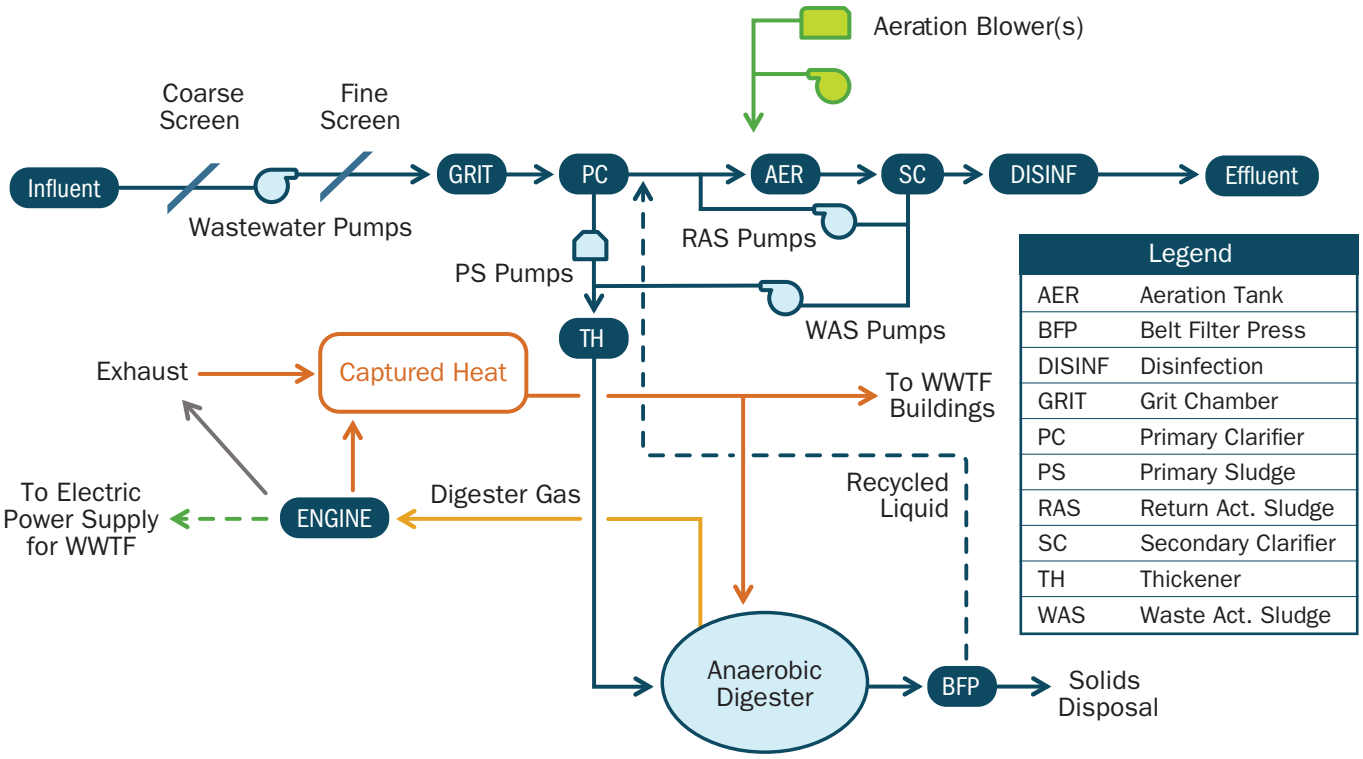

Energy baseline

For any type of facility, baseline energy use is the actual energy use under current operating conditions for a given period of time. A baseline is usually measured before new best practices are implemented, and can be measured at the specific process level and at the system level, and are derived from energy-bill data. When an energy-improvement measure is completed, the most current usage can be compared with the previous usage to determine energy savings.

Many utility managers index their facility's energy usage through a production or demand index such as kWh/MGD or kWh per 1,000 lbs of Biological Oxygen Demand (BOD). This index is called a Energy Performance Index (EPI). Establishing an energy baseline helps facility managers understand the relative efficiency or change in efficiency relative to the core purpose of the operation, i.e., water production or wastewater treatment.

Figure 3 illustrates a water utility's KPI tracking relative to their goal. The baseline (previous year's average, by month) is represented by green bars and an annual average is represented by a red line. If the utility sets a goal to save 5% of its energy after implementing energy efficiency measures, a new annual average line (blue) is set as the targeted KPI level.

Figure 3: Electric KPI goal and tracking

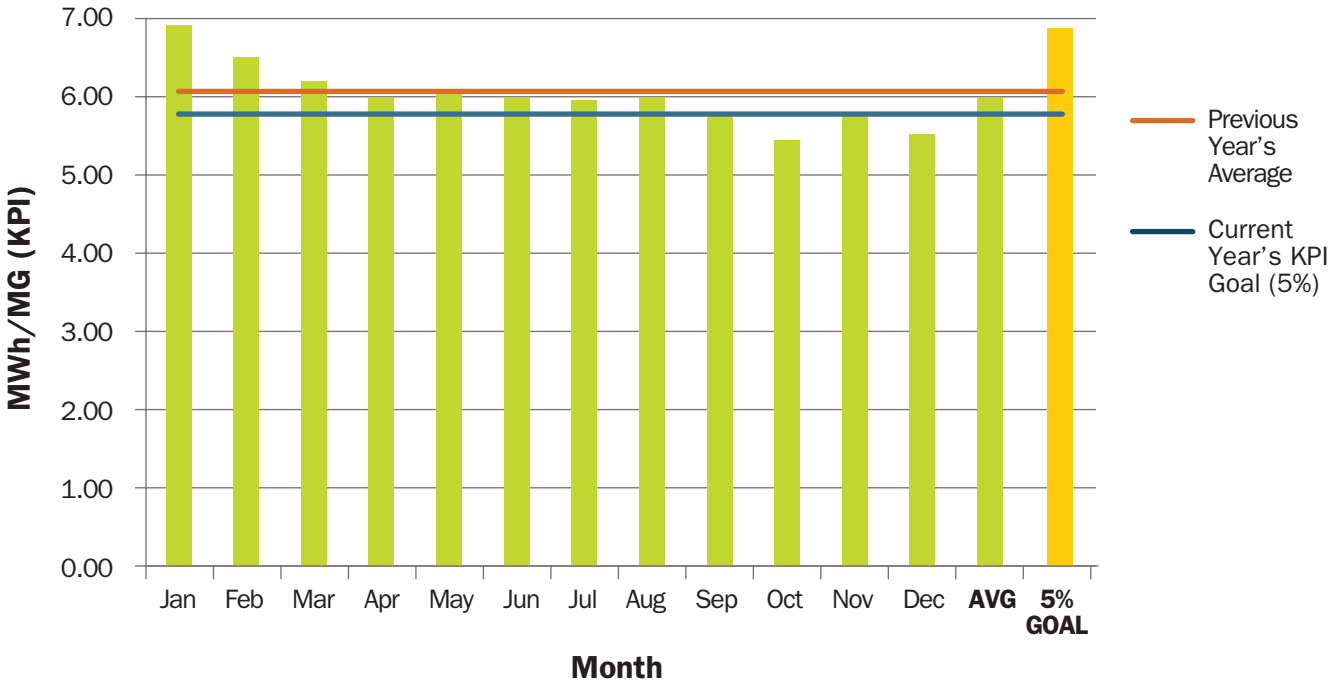

Energy benchmarks

Benchmarking is a term commonly used by energy managers. For the purposes of this guidebook, the following definition from the American Water Works Association (AWWA) is considered useful:

> *"A benchmark is something that serves as a standard by which others may be measured or judged."*

An energy benchmark is an energy use target a facility could achieve through the implementation of energy efficiency measures.

A special type of benchmark is a best-practice benchmark. Once a facility assessment to review the existing equipment and operations is complete, a best-practice benchmark can be estimated by subtracting the recommended best-practice energy savings from the current energy use. Table 4 represents the findings from best-practice benchmarks Focus on Energy developed for the three most common wastewater treatment types in Wisconsin. The values in the far-right column show the percent of savings attainable from best practices.

Table 4: Best-practice benchmarks and top performance quartiles for Wisconsin wastewater facilities

FACILITY TYPE	FLOW RANGE (MGD)	AVERAGE ENERGY USE (KWH/MG)	TOP PERFORMANCE QUARTILE (KWH/MG)	BEST-PRACTICE BENCHMARK (KWH/MG)	AVERAGE POTENTIAL SAVINGS
Activated Sludge**	0 -1	5,440	< 3,280	3,060	44%
	1 - 5	2,503	< 1,510	1,650	34%
	> 5	2,288	< 1,350	1,760	23%
Aerated Lagoon	< 1	7,288	< 4,000	3,540	51%
Oxidation Ditch	< 1.2	6,895	< 4,000	4,320	37%

The table also shows the Wisconsin wastewater industry top performance quartiles in terms of current energy use. Using the industry's top performance quartile as a target is another way to approach energy efficiency planning. When facility operators compare their energy use with the average and top quartile values, they can see how their facility compares with its peers. Once an energy management plan is established, the facility operator can track performance improvement.

ENERGY MANAGEMENT

Program development

Energy management program development goes beyond lowering on-peak demand and improving energy efficiency. Water and wastewater utilities should incorporate a broad range of energy management goals, including:

- Improving energy efficiency to reduce the facility's total energy cost
- Learning how and when the facility uses energy
- Minimizing fee/rate impacts by controlling peak electric demand
- Managing systems when there is energy-cost volatility
- Improving the efficiency and effectiveness of the operations serving the utility's core mission
- Striving for energy neutrality when opportunities exist
- Implementing cost-effective renewable energy

Water and wastewater utilities are tasked with minimizing the costs associated with protecting water resources while maintaining a high degree of reliability. The goals listed above consider both the costs associated with energy consumption and the reliability of high-quality water over time. A good energy management plan needs to balance these goals according to their feasibility and the priorities of the utility.

Understanding goals

The goals of an energy management program often overlap with other best practices for utility management. For example, an effective preventive maintenance program can improve motor efficiency and system reliability. Computerized maintenance programs providing information about equipment, like motor size and equipment capacity, can help in profiling energy use. Preventive maintenance can be scheduled to indicate when equipment needs to be replaced, ensuring adequate time will be available to assess energy efficiency options.

Energy benchmarks based on output – for example, gallons of water treated per kilowatt hour of electricity consumed – can give the utility a better sense of its overall usage trends and how its energy efficiency investments perform over time.

The implementation of energy management practices can also have additional beneficial effects such as:

- Improved treatment
- Lower maintenance
- Increased equipment life
- Reduction in chemical consumption
- Lower utility surcharges
- Improvement in staff communications and morale
- A better understanding of treatment processes

These ancillary benefits should be considered when evaluating prospective energy management opportunities.

Understanding energy cost as it relates to usage is critical in managing energy at a utility which requires a full understanding of the energy utility rate structure relative to quantity of usage and time of use. Water and wastewater treatment are intrinsically energy intensive due to the need to move large volumes of water and treating water. The cost of the electricity used in treatment processes is based on two main components: the quantity and demand level of electricity used. The profile of equipment used at a facility and the real-time demand of treatment, whether it is for purifying community water supply or for treating wastewater, will have significant bearing on the ability of a facility to manage its energy usage.

Building a program

This section outlines a nine-step approach to developing an effective energy management program. This approach will ensure a systematic process to document, analyze and support energy-related decisions both the Energy Team and stakeholders can understand.

Most options for reducing energy use involve some commitment of resources, typically a capital investment or a modification to standard operating procedures. Trade-offs among various values can make investment decisions difficult, underscoring the need for a diverse Energy Team that can evaluate changes from a variety of perspectives to ensure none of the utility's primary goals are compromised. High-quality energy use information allows the team to evaluate the benefits and costs and fully address the facility's priorities in the decision-making process.

When pursuing the goal of system-wide energy efficiency, it is imperative to continually monitor and assess where additional energy efficiency can be achieved. Energy management is a continuous effort requiring long-term support. As changes to effluent requirements ensue, facility managers must be vigilant to make sure the least amount of energy is being used to meet permitted effluent limits.

Each of the nine steps are described in more detail on the following pages.

Basic steps in building an energy management program

Step 1 – Establish organizational commitment

While this may seem simple, this step may be the most critical to the success of an energy management plan. In addition to approving and supporting the formation of an Energy Team, this step ensures projects will be able to advance to implementation. Successful energy management requires a focused, coordinated and empowered effort. Effective energy management begins at the top and requires a champion who can rally the organization in support of an Energy Team's decisions. All power must flow from management into an Energy Team charged with achieving energy efficiency and renewable energy goals.

KEYS TO SUCCESS

- Understand the value of system-wide energy efficiency
- Identify and secure management support
- Establish and communicate measurable long-term energy goals

Step 2 – Assemble and initiate an energy team

This step focuses on building a solid Energy Team comprised of key stakeholders. Because energy use cuts across many organizational boundaries, a diverse team understanding the wide array of issues around energy management and a commitment to long-term energy management needs to be in place. While the specific level of effort required from different team members may vary over time, it is essential to maintain involvement, commitment and support from each team member.

Municipalities and industries should assemble an Energy Team representing as many stakeholders as possible, including management, administration, accounting, compliance, operation and maintenance. The integration of all the disciplines into the team allows for input from all business and operational perspectives and distributes the responsibility of achieving the goals. It also allows the team to remain empowered to take actions necessary to guide the facility toward energy-plan implementation.

An Energy Team is responsible for:

- Profiling energy use
- Identifying and evaluating opportunities
- Establishing attainable energy goals
- Prioritizing and selecting projects
- Procuring the resources necessary to make each project successful
- Measuring project impacts
- Reporting impacts and results to management

A strong Energy Team will help to resolve many of the organizational barriers to improving energy use. In some facilities, the operations staff is never involved in evaluating energy-procurement decisions and may never see energy bills. This lack of awareness of the impact of energy usage on production is counterproductive not only to the achievement of energy efficiency goals, but to fiscal responsibility, as well. In an effective energy management model, a cross-functional Energy Team improves communication between the business group and the operations staff, reinforcing the connection between energy use and energy procurement.

To start this step, an Energy Team could invite an elected official such as the mayor, a manager at the treatment plant, an operator or a member of the finance department to join their team. In cases where changes to energy management practices will result in facility-design modifications, the appropriate regulatory agency could also be invited.

An advanced energy team will:

- Consist of representatives of each critical stakeholder.
- Set a reasonable schedule for meeting to take advantage of early momentum.
- Develop an energy management plan. This plan should establish the overall mission and document the organization's commitment to achieving system-wide energy efficiency goals. Details of the plan, including scheduling and assignments, will be added as the team gains a better understanding of needs, resources and opportunities through initial investigations.
- Establish performance goals, metrics and incentives. This task includes establishing benchmarks and targets, identifying ways to measure changes in performance indicators, and finding ways to encourage support of these efforts. This also includes establishing a communication plan to define how information will be shared, assigning tasks and setting a schedule of milestones and deadlines.
- Define resource needs. Utility management should demonstrate a commitment to the team by allocating resources to achieve the stated goals. The team will be responsible for identifying resource needs such as staff time, equipment, external consulting support and budget. Resource requests should be balanced by projected energy benefits with respect to core functions.
- Serve as an energy information clearinghouse. The Energy Team should be a utility-wide resource providing information about energy use and coordinates communications about any projects affecting energy use. For example, recommendations from the Energy Team should be coordinated with the capital improvement-planning process and annual maintenance program.

KEYS TO SUCCESS

- Achieve management support and participation
- Attain cross-functional representation
- Allocate adequate resources (time, staff, budget, expertise)
- Establish performance indicators demonstrating progress
- Communicate intent to all employees

Step 3 – Develop a baseline of the facility's energy use

This step focuses on gathering readily available energy use information and organizing information into a basic model able to help utilities understand energy use patterns and communicate findings. The model can be as simple as plotting energy bills over time (e.g., total kWh by day or month) or as complex as listing all of the major energy-using processes and specific power data. An example of a simple approach is presented in Appendix A.

In this step, facility personnel will collect the data needed to provide an energy baseline against which future energy use will be compared. This will be especially useful to assess the energy, and non-energy, impact of projects. Data should be relatively easy to collect, such as that obtained from existing metering, and should be time-labeled. Baseline data should include production data, such as millions of gallons per day (MGD) supplied or pounds per day (ppd) of biochemical oxygen demand (BOD) treated, along with the corresponding demand and energy usage.

Based on the facility's goals, the Energy Team will need to identify a way to measure success in terms of energy usage. The measure of success, or Key Performance Indicator (KPI), will be expressed in production units such as kilowatt-hours per unit of flow. By tracking the KPI over time, facility personnel will be able to detect changes in energy usage per unit of output from changes in activities or equipment.

Each time an intervention is made, such as the installation of new equipment, the time should be recorded on the timeline of the tracked data so the impact of the energy improvement can be seen and quantified. For example, the installation of a new aerator may reduce a wastewater-treatment facility's KPI from 3,500 kWh per million gallons (MG) to 2,200 kWh per MG. For the most accurate results, the energy use data on individual pieces of equipment should also be collected and tracked individually (see Step 4). The data can then be assembled into systems for analysis of the complete treatment process system. Tracking KPIs can also show changes in operational characteristics, influent or effluent flow, and weather. It can even show how energy usage changes with new equipment or facility additions.

An Energy Team should focus on improving the understanding of where, when and why energy is used within a water/wastewater system and include it in their energy management plan. Studies have demonstrated even the process of investigating energy use and improving awareness among staff can provide measurable energy efficiency savings ranging from 3 to 5%.

An advanced energy team will:

- Collect and organize data on equipment, energy use, energy costs, hydraulic loading and organic loading. At a minimum, one year of data should be analyzed to identify any seasonal patterns, with preference for three or more years worth of data for a more thorough analysis. Data sources can include utility-billing records, supervisory control and data-acquisition system records, O&M records and equipment/motor lists with horsepower and load information. Regulatory agency water-quality reporting records providing hydraulic and waste strength characteristics may also be useful.
- Develop an understanding of where, when and why energy is used. Organizing treatment processes by functional area will facilitate energy planning and management on a process level and will also make performance measurement and baseline development easier.

- Evaluate energy bills and understand the energy-rate structure. Many energy management strategies are directly linked to the pricing of energy, and it is critical to understand how the energy-rate structure affects energy costs. Reaching out directly to the power utility account manager for additional assistance in understanding your electric bill and available rate structures should be considered. Appendix B explains a typical utility bill for a wastewater-treatment facility of any size in Wisconsin.
- Assess the relationships between hydraulic loading, organic loading and energy use. Hydraulic data (i.e., flow) and organic loadings should be assembled to analyze the correlations between flow, organic loading and energy use. Analyze data at several time frames to identify diurnal patterns, seasonal patterns, the effects of wet and dry weather, average daily flows, and energy demand.
- Build a basic energy use model based on a conceptual understanding of the utility operation to organize data and capture energy use patterns. In the early stages of energy management, typical models can be created using a generic spreadsheet. Larger utilities should consider purchasing specific software for organizing energy data. The level of modeling sophistication can range from a basic motor list providing horsepower and energy demand (kW) to a time-varying (dynamic) model predicting hourly demand and energy costs. The process of modeling can help to identify the most helpful types of information, the limitations on currently available information and what data needs to be gathered. In addition, an energy use model can be a valuable tool for testing theories, validating an understanding of energy use, calculating performance metrics, and visualizing and communicating energy use patterns.
- Create basic graphics and reports to communicate initial findings. Although this step occurs early in the process, it can produce some valuable insights which should be shared with a wider audience, including systems management, administration, and operation and maintenance personnel.

KEYS TO SUCCESS

- Begin with simpler tasks and gradually increase the complexity of the information gathered to match goals, needs and resources
- Use initial findings to organize and justify future more-detailed information gathering

Step 4 – Develop profiles of energy usage for major equipment types

This step relies on collecting data for current operations to be used in tracking energy usage. The facility manager should know which end uses in the operation – such as pumping or specific treatment processes – consume the most energy. A full profile of energy use with respect to end use should be developed. A typical distribution of energy use per process can be seen in the example below.

Figure 4: Electricity requirements for activated sludge wastewater

Derived from data from the Water Environment Energy Conservation Task Force
Energy Conservation in Wastewater Treatment

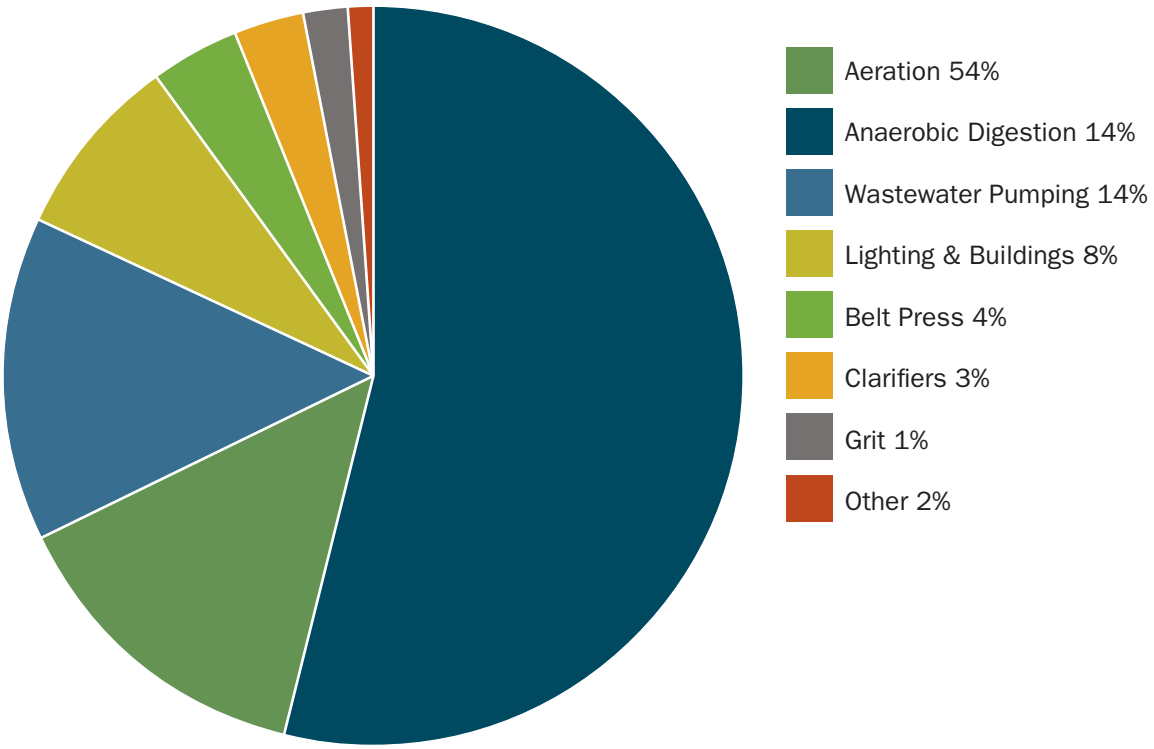

One useful tactic for gaining a better understanding of energy use is to interview supervisory, operations and maintenance staff. Interviews can help to verify understanding of energy use, identify limitations to future actions and provide helpful suggestions for energy projects.

An advanced energy team will:

- Perform system walk-through assessments to verify equipment lists, size and capacity of equipment, operating status, and motor sizes for major unit treatment systems.
- Conduct staff interviews. Use these interviews to build understanding of operating practices, maintenance practices and history, regulatory and engineering limitations, and operational priorities. In addition, collect suggestions for energy efficiency project opportunities.
- Gather energy performance data. Fill gaps in the energy model with field data. This may include direct measurements using a power meter, tracking average equipment run times of motors throughout the day or using a more sophisticated sub-metering system to gather actual energy use and time-of-use data.
- Track energy performance by equipment process. The data from the various end-use systems can be applied to understanding the overall facility KPI discussed in Step 3. Furthermore, if an equipment process contributes significantly to total energy use, it may be worthwhile to develop an individual baseline and process performance index (ppi) for the specific process. One example of this is kWh per Pumps A, B and C (daily, monthly, annual). The ppi could be accompanied by a load shape showing peak and average demand (kW). Another example could be kWh per Aerators X, Y and Z, as a function of influent BOD. Since processes are additive components of the overall system, including more processes in tracking, will improve the understanding of what contributes to system performance. Once baselines, KPIs and equipment performance characteristics are obtained for the system and key processes, the performance of energy projects can be measured and tracked. Performance metrics can be compared with historical data or engineering design criteria or can be used for benchmarking comparing performance with peer facilities (see Step 7).
- Update the energy use model, detailing it with equipment-specific data. Make any improvements and/or corrections in the energy use model using newly gathered field data and observations. This may include refining assumptions such as the loadings or times of use for various motors and other equipment.

KEYS TO SUCCESS

- Use energy baseline results (Step 3) to discover and prioritize field efforts on the most promising opportunities such as large motors and energy-intensive processes. It may be economical to collect field data only for the largest equipment. Approximations may be an acceptable alternative to field data for smaller systems and motors.

Step 5 – Identify and assess project opportunities

Achieving system energy efficiency requires consideration of both energy efficiency and renewable energy opportunities. While efficiency reduces energy consumption, renewable energy enables the system to utilize available "free" energy from the system, including solar, wind and biogas. Each opportunity must succeed on its own cost-effectiveness with respect to the system's specific needs, and both types of projects should be considered side-by-side when making energy-project investment decisions.

Begin by utilizing the data profile to identify energy-project opportunities and prioritize them in the context of the overall business and regulatory priorities of the utility. If the expertise to analyze the opportunities does not exist in-house, consider hiring an external expert who can develop a list of priorities and an implementation plan.

An energy efficiency opportunity can be any system change (equipment or operations) reducing energy consumption or power demand. A renewable energy opportunity can be any usage of available energy from the wind, sun or biogas able to displace purchased energy. In this stage, the Energy Team will identify a list of energy efficiency opportunities with the intention of evaluating and prioritizing them according to feasibility and cost-effectiveness. Ideas for energy efficiency may come from a variety of sources, including reference materials, success stories from similar water/wastewater systems, interviews with staff, consultant recommendations or discussions with energy providers or energy efficiency program advisors. Categorizing energy efficiency opportunities by process area or funding approach can help organize a large amount of information into a manageable format. Examples of categories for organization include:

- Capital program versus equipment replacement
- Process (aeration, pumping) versus ancillary technology (lighting, HVAC, etc.)
- Operational change (a change in the sequence or the way operations are done by facility personnel)
- Automation or controls
- Maintenance improvements
- Business case analysis results

An advanced energy team will:

- List and categorize best practice opportunities, focusing on large equipment and processes where the greatest savings opportunities exist
- Investigate similar projects implemented at peer facilities
- Discuss energy efficiency opportunities with external experts, such as utility account representatives, energy efficiency program providers, and other external consultants
- Rank projects based on business case analysis results (payback, life cycle cost, ROI, etc.)

ATTAIN ENERGY NEUTRALITY

Is it better to save energy or to produce it? The goal of attaining energy neutrality can be incorporated into any system's energy management plan. Many water and wastewater utilities have already moved toward this goal by utilizing both energy-efficient and renewable energy options.

BECOME ENERGY EFFICIENT

The trade-offs between energy efficiency and renewable energy development are often complex. Generally, a water/wastewater utility will focus its efforts first on becoming as energy efficient as is practicable, making sure all its processes and end uses are as trim as possible. Generally, placing emphasis on energy efficiency before renewable energy projects makes sense because, when a system's energy-usage footprint is minimized, it becomes easier to meet the remaining energy needs with internally generated renewable energy resources. However, technical issues, including an opportunity to take advantage of a new construction digester project, may warrant the utility's consideration of biogas-utilization technology before an energy efficiency improvement.

ASSESS THE SITUATION

In the normal sequence of project development, once energy efficiency has been achieved at a facility, the next step is to assess the feasibility of renewable energy options. A variety of renewable sources are available: solar, wind, hydro and biogas, among others. Each source should be assessed site-specifically for feasibility and lifecycle cost. A combination of renewable resources may even be appropriate for a site. For example, a combination of solar and biogas may be appropriate: a solar system can offset some energy requirements during the daylight hours and a biogas system can offset the energy requirements during the evening hours or on cloudy days.

FIND THE RIGHT FIT

Each renewable resource can be assessed for what may best fit its system requirements in terms of technical feasibility and cost-effectiveness. In the case of municipal utility systems, since there is little risk of going out of business even in a declining economy, the utility experiences the luxury of being able to justify longer project paybacks. However, at the same time, the municipal utility system is obligated to serve utility ratepayers who are subject to variations in the economy.

KEYS TO SUCCESS

- Complete a list of energy-project opportunities
- Consider the relationship of each listed opportunity to the Energy Team's stated goals
- Initially focus on the larger system opportunities while including a wide array of energy efficiency opportunities
- Consider renewable energy opportunities, as well as energy efficiency, that will be cost-effective and make sense for the system

Step 6 – Prioritize opportunities for implementation

The final product of this step is a short, prioritized list of energy projects which have been carefully evaluated for energy-savings benefits from the list of opportunities generated in Step 5. This short list of prioritized energy projects should be based on the water/wastewater system's business priorities and the ability of the projects to meet the utility's stated energy goals. As identified and evaluated by the cross-functional Energy Team, the listed projects must be economically viable and able to be implemented with minimum risk or conflict.

Prioritizing energy projects may be difficult when comparing the goals and risks of different, competing projects. In this step, the Energy Team will compare the various benefit and cost trade-offs. Whenever possible, a benefit-cost test should be applied to prioritizing projects. The utility system will also apply its own economic evaluation methods such as payback, return on investment or lifecycle cost to prioritize energy projects. A discussion and examples of these economic-evaluation methods are available in Appendix C.

Any complete evaluation of options must also consider intangible effects such as risk to compliance or the potential impact on the health and safety of workers. Assigning a dollar value to benefits – such as reducing the risk of process failure or improving operator safety – can be challenging. In such cases, it may be necessary to develop more specialized evaluation criteria.

An advanced energy team will:

- Evaluate the monetary characteristics of the proposed energy projects. Choose appropriate evaluation methods, quantify the benefits and costs, convert all costs into equivalent terms and tally the results.
- Identify suitable evaluation criteria to compare the benefits and costs of non-monetary features of the proposed energy projects.
- Combine the non-monetary and monetary values. Score and rank the benefits and costs of each proposed project and organize the summary evaluation into a presentable format for communication.
- Ensure the results make sense with respect to the utility's overall capabilities and mission. Implementing energy projects should not undermine a utility's capacity to implement necessary changes with respect to production or compliance.

KEYS TO SUCCESS

- Convert all benefit-cost criteria into monetary terms whenever possible (monetary terms are easy to compare and communicate)
- Evaluate all energy goals, including ancillary benefits whenever possible

Step 7 – Develop and implement the plan

This step ensures the energy management plan reflects the priorities of the stakeholders and is effectively executed to realize energy benefits. The plan will include specifications for projects, a schedule for completion, a budget, task assignments and expected results based on previous analysis. The plan will show relationships of energy projects to each other and existing processes, potential shutdowns or other changes in routine schedules, and any risks to performance of core activities. Tracking and reporting mechanisms will be put in place to report results once the projects are installed and operational.

Ultimately, any implemented project must demonstrate an impact on the utility's overall energy performance, with respect to its designated Key Performance Indicator. The energy management plan can help forecast the change in KPI based on evaluations conducted prior to installation.

One useful tool a utility may use to gauge performance of its energy projects is benchmarking. Benchmarking is a process similar to baselining for an individual utility except it averages the energy performance across a sampling of peer facilities. A benchmark can be used as a reference point for measuring an individual facility's performance with respect to other similar facilities with the same types of processes and operations. Beginning with its own energy baseline, the Energy Team may want to include a water or wastewater energy benchmark as it sets its goals. See Appendix A for more information on benchmarks at typically sized water or wastewater utilities.

Steps 4, 5 and 6 helped identify and prioritize energy project opportunities. This step focuses on implementation.

An advanced energy team will:

- List the energy-project opportunities selected for implementation and clearly describe the objectives of each
- Indicate the resources needed, including time, staffing, budget and financing plan
- Discuss any associated production factors, including technical risks
- Develop and procure any specifications needed, including design criteria and procurement-related documents
- Identify any expected changes in standard operating procedures and/or process control strategies
- Develop a schedule for implementation, including milestones and the procurement of the necessary regulatory approvals (if applicable)
- Set realistic expectations for the project(s) in terms of resource procurement, scheduling, anticipated production impacts, energy impacts and forecast benefit-cost
- Tie forecast impacts to the Key Performance Indicator

KEYS TO SUCCESS

- Describe clear, measurable project objectives, including benefits, costs and risk abatement
- Receive authorization for the requested resources, including budget and contractor approvals
- Establish a reasonable schedule for implementation

Step 8 – Track and report progress

The success of a selected project should begin to be measured upon installation. Measurements should focus on performance metrics, including the status of the installation schedule as well as the resulting impacts on energy usage, operations, maintenance, process performance, staff attitudes and productivity. Tracking provides historical documentation of patterns, trends and the impacts of project interventions. Depicted graphically, they can show dramatic results arising from Energy Team efforts. Results of performance monitoring should be communicated to stakeholders, including anyone involved in the planning process, the operations and maintenance (O&M) staff responsible for implementation, and utility management.

Often overlooked, this step is critical to sustaining an energy management program. It provides insight into making necessary adjustments to improve performance, guidance for future decision-making and motivation for staff to continue on course and achieve goals.

An advanced energy team will:

- Establish the appropriate performance metrics
- Find or create a reasonable benchmark able to serve as a performance target with respect to KPI
- Assign responsibility and allocate resources for tracking and reporting the progress of a project
- Create a communication plan specifying what should be reported, to whom progress reports are delivered, when the reports should be delivered and any follow-up actions required

KEYS TO SUCCESS

- Use reliable, measurable performance metrics
- Follow up on data analysis, e.g. investigating when data appear irregular or celebrating when success is indicated

Step 9 – Continually update plan to achieve energy management goals

As lessons are learned and progress is made toward achieving the energy management plan's goals, the Energy Team will want to adjust the plan to reorder priorities, procedures and assignments to ensure the long-term plan is a success. The Team should employ a continual improvement process by identifying and refining new project opportunities and adjusting the implementation plan according to changing needs.

This step is a reminder energy management is not a one-time action and needs to be embraced as a continuous and ever-changing process so it becomes a seamless part of the business practice of the utility. The water/wastewater industry in general should continue to move forward in its quest to implement energy efficiency and renewable energy, both in retrofits and new designs.

Over time, needs and priorities for a utility system will change. This may be in large part due to the impact energy projects have had on the system, as well as a variety of external factors such as regulations or the economy. In addition, the system operators will learn valuable lessons over time regarding team dynamics, project development and communications.

An advanced energy team will:

- Monitor the impacts of projects on the system and determine results
- Learn where there have been successes or failures so future adjustments can be made
- Monitor the KPI and process performance indices to look for additional improvements
- Reset goals and tasks as circumstances require

KEYS TO SUCCESS

- Use the KPI to identify irregularities and successes
- Recognize shortcomings and adjust accordingly
- Maintain motivation through acknowledgment and celebration

Constraints

Most engineering decisions must be made within the context of a larger business plan, which requires determining all the impacts of proposed projects, showing a benefit-cost analysis and identifying those projects with the most promising benefits, with respect to all departments within a utility. Comprehensive awareness and understanding of all concerns and issues are requirements for good energy planning, management and decision making.

Typical constraints on an energy management plan include the following:

- Organizational
- Capital costs
- Process reliability
- Acceptance of modifications by facility personnel
- Regulatory requirements, approvals and limits
- O&M capabilities and non-energy O&M costs
- Engineering feasibility
- Space availability

While effective energy management remains a very important goal, projects should not undermine design limitations or compliance with regulatory requirements. Site characteristics and all the variables influencing project selection (labor, chemical costs, disposal costs, capital costs, etc.) may render even the most energy-efficient solution or renewable energy project infeasible.

GENERAL BEST PRACTICES

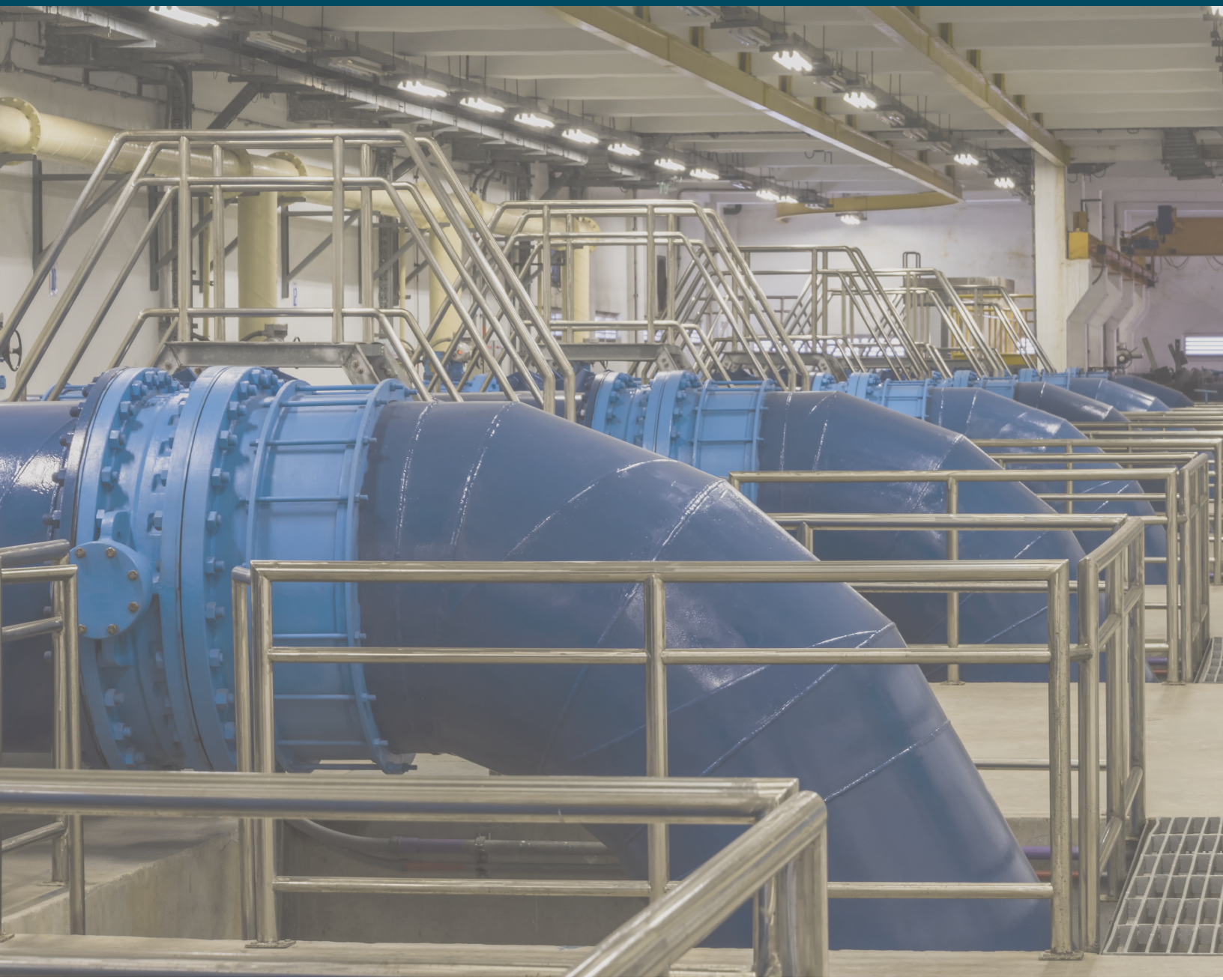

Table of contents

Planning and management		
G1	Appoint an energy manager	30
G2	Utilize and manage monitored and recorded data	31
G3	Manage electric rate structure	32
G4	Include energy efficiency in capital improvement and operations plans	33
G5	Let energy efficiency pay for itself	34
G6	Use lifecycle cost analysis for purchase selection	35
G7	Design flexibility for today and tomorrow	36

Assessments		
G8	Facility energy assessments pump station assessments	37
G9	Pump station assessment	38

Monitoring and controls		
G10	Real-time energy monitoring	39
G11	Supervisory Control and Data Acquisition (SCADA)	40
G12	Electric peak reduction	41
G13	Sequence backwash cycles	42
G14	Idle or turn off equipment	43

Equipment measures		
G15	Properly maintain motors electric motors	44
G16	Correctly size motors	45
G17	Install high-efficiency motors	46
G18	Variable frequency drive applications	47
G19	Automate to monitor and control	48

Equipment measures		
G20	Improve power factor	49
G21	Optimize pump system efficiency	50
G22	Reduce pumping flow	52
G23	Reduce pumping head	53
G24	Avoid pump discharge throttling	54
G25	Ultraviolet (UV) disinfection options	55
G26	Incorporate energy efficiency in membrane treatment systems	56

Education and information		
G27	Energy education for facility personnel	57
G28	Ensure plant personnel receive and understand monthly energy bills	58

Index

The following table shows the typical energy savings and payback periods for the Best Practices found in this section, grouped by category, and includes three blank columns for you to complete as you analyze each practice. You can utilize this checklist to track the process of reviewing these Best Practices and note which are feasible for your utility.

	BEST PRACTICES	TYPICAL ENERGY SAVINGS OF UNIT OF PROCESS (%)	TYPICAL PAYBACK YEARS	BEST PRACTICE FEASIBLE? (YES/NO)	DATE ANALYZED	FURTHER REVIEW NEEDED? (YES/NO)
Planning and management						
G1	Appoint an Energy Manager	Variable	Variable			
G2	Utilize and manage monitored and recorded data	10 - 20	Variable			
G3	Manage electric rate structure	Variable	Variable			
G4	Include energy efficiency in capital improvement and operations plans	Variable	0.5 - 5			
G5	Let energy efficiency pay for itself	Variable	Variable			
G6	Use lifecycle cost analysis for purchase selection	Variable	Variable			
G7	Design flexibility for today and tomorrow	Variable	1 - 5			
Assessments						
G8	Facility energy assessments	10 - 50	Variable			
G9	Pump-station assessment	20 - 50	Variable			
Monitoring and controls						
G10	Real-time energy monitoring	5 - 20	Variable			
G11	Supervisory control and data acquisition (SCADA)	Variable	Variable			
G12	Electric peak reduction	Variable	< 1			
G13	Sequence backwash cycles	Variable	Variable			
G14	Idle or turn off equipment	Variable	< 1			
Equipment measures						
G15	Properly maintain motors	Variable	Variable			
G16	Correctly size motors	Variable	Variable			
G17	Install high-efficiency motors	5 - 10	< 2			
G18	Variable frequency drive applications	10 - 40	0.5 - 5			
G19	Automate to monitor and control	Variable	Variable			
G20	Improve power factor	Variable	Variable			
G21	Optimize pump-system efficiency	15 - 30	0.25 - 3			
G22	Reduce pumping flow	Variable	Variable			
G23	Reduce pumping head	Variable	Variable			
G24	Avoid pump-discharge throttling	10 - 50	Variable			
G25	Ultraviolet (UV) disinfection options	Variable	Variable			
G26	Incorporate energy efficiency in membrane-treatment systems	Variable	Variable			
Education and information						
G27	Energy education for facility personnel	Variable	Variable			
G28	Ensure plant personnel receive and understand monthly energy bills	Variable	Variable			

G1 – Appoint an Energy Manager

Water and/or wastewater utilities should identify and appoint an Energy Manager. The duties and responsibilities of the position should be defined according to the needs of the utility. If possible, the position should have the authority and budget for improving the energy efficiency of the existing system along with making sure all new construction and equipment upgrades are energy efficient.

See also	Not applicable
Primary area/process	This practice involves all components of water and wastewater systems.
Productivity impact	No impact
Economic benefit	Having an Energy Manager does not guarantee payback; however, an effective Energy Manager can produce significant returns on the investment. Payback on projects implemented as the result of having an Energy Manager will vary by project and may range from a few months to several years.
Energy savings	Energy savings are derived from the incorporation of energy efficient equipment and practices in the capital and operational modifications get implemented.
Applications & limitations	No limitations
Practical notes	The Energy Manager needs to have defined responsibilities and a budget in order to plan, develop and implement new energy efficiency programs and projects.
Other benefits	Additional benefits include a well-managed energy budget and optimized energy utilization. The Energy Manager may also support energy-related budget proposals before the governing commission.
Stages of acceptance	Increasingly, utilities are seeing the value of having an in-house champion (Energy Manager) able to promote, integrate and shepherd energy efficiency projects to implementation.

G2 – Utilize and manage monitored and recorded data

Water and wastewater system operators are encouraged to monitor and record facility/station data, including influent flow, biochemical oxygen demand, total suspended solids, ammonia, dissolved oxygen, kilowatt (kW) consumption, kW demand and therms. This data should be organized and managed so it becomes a usable tool in managing the operations and energy usage of a water/wastewater system. The recorded data, represented by trend graphs and pie charts, provide a pictorial tool able to give insight into the operations, maintenance and administration of the system. For example, a trend graph of energy consumption versus influent flow can show the consistency or inconsistency of energy consumption with respect to operation. A similar plot of energy consumption versus organic load can be valuable in monitoring the impact of organic loading on a wastewater system. Recorded energy use data for each major piece of equipment can show load shapes and possible decay trends, making it invaluable for energy benchmarking and in finding energy efficiency opportunities.

See also	G8 – Facility energy assessments G10 – Real-time energy monitoring G12 – Electric peak reduction
Primary area/process	This practice should be applied across all water and wastewater systems.
Productivity impact	There should be no impact aside from a minor disturbance during the installation of equipment associated with the practice.
Economic benefit	The payback period will vary with the complexity of the installed data collection equipment and tools developed from the recorded data. Most of the value of this practice will be obtained by reducing and better managing energy consumption.
Energy savings	Savings will vary but can be in the range of 10 to 20% of the total energy consumed by the system.
Applications & limitations	There are few, if any, applications where data cannot be monitored, recorded and managed.
Practical notes	There is value in applying this practice to all water/wastewater systems.
Other benefits	Additional benefits include improved operation, water quality and longer life for the equipment.
Stages of acceptance	Improved data management and its application to problem-solving is increasingly becoming an accepted practice in water- and wastewater-system management.

G3 – Manage electric rate structure

Facility management should work with the electric utility account manager to review the facility's electric rate structure. The review should determine if the current rate structure is the most appropriate pricing structure for the facility, based on peak demand and overall energy usage.

See also	G12 – Electric peak reduction
Primary area/process	This should be implemented facility-wide, with special attention to accounting and purchasing.
Productivity impact	No impact
Economic benefit	There is no direct return on investment for this practice. Actual process changes made in response to recommendations may result in economic benefits.
Energy savings	No direct savings. Energy and power-demand savings may be available if the facility can respond to the current electric-rate structure.
Applications & limitations	All facilities should apply this practice.
Practical notes	All personnel should be aware of how their specific facility or department is charged for energy consumption and peak demand.
Other benefits	Management will give more attention to the operation of a system if an understanding of the electric utility-rate structure is incorporated into daily operating procedures and information is made available to everyone.
Stages of acceptance	The practice of reviewing utility bills and rate structures is becoming more common as its value becomes recognized and personnel become more energy-cost conscious.

G4 – Include energy efficiency in capital-improvement and operations plans

Facility management should incorporate all appropriate energy efficiency and renewable energy best practices into capital and operations improvement plans. This includes clearly defining system goals and objectives and setting the design criteria for system improvements. Including energy projects upfront in the design stages can avoid lost opportunities once the measure is installed. Correcting a design oversight after the fact can be costly.

See also	Not applicable
Primary area/process	This process should involve all components of water treatment/distribution and wastewater-treatment systems.
Productivity impact	No impact
Economic benefit	Payback will vary by facility size, type of treatment and by project, depending on the energy benefits and costs of alternative designs and operations. Payback may vary from a few months to several years.
Energy savings	Present and future energy savings are derived from the incorporation of energy best practices in the capital and operations improvement plans.
Applications & limitations	There are no limitations on this practice because comprehensive planning, which includes energy-project design, occurs prior to project development.
Practical notes	Proactive and open communications promote the success of capital and operations improvement planning including consideration of energy projects and energy management. Combining energy efficiency measures into a capital improvement project and justifying them in the aggregate helps avoid lost opportunities for future energy savings. Energy-saving improvements should always be evaluated on a lifecycle cost basis.
Other benefits	Well-conceived and planned projects result in the highest value to the utility.
Stages of acceptance	Utilities are recognizing the value of project development and management. Its acceptance is growing, especially to better manage limited budgets.

G5 – Let energy efficiency pay for itself

When analyzing the financial impact of an energy efficiency project, the utility should include the projected payback period, calculated based on the energy savings. The inherent value of a good energy project is it will eventually pay for its initial cost before it needs to be replaced.

The energy savings of an energy efficiency investment can be accounted for and used to offset the cost of repaying the loan used to fund the project. After the loan has been paid in full, the value of all energy savings accrues to the water/wastewater system. Since many projects pay for themselves in less than five years, a considerable amount of future net benefit is available to the water/wastewater system for this investment.

When considering a given project and all associated costs (including payback range and projected energy savings), facility management will determine whether the payback period is within the reasonable range of acceptability.

See also	Not applicable
Primary area/process	This practice should be applied to all projects incorporating energy savings and/or peak demand reduction for a water or wastewater system.
Productivity impact	No impact
Economic benefit	Where the energy savings are applied to the repayment of a loan for the equipment, payback does not have to be considered if the repayment period is shorter than the lifetime of the equipment. Care should be taken to ensure a reliable estimate of monthly savings is made and the savings exceed the loan payment. The ultimate benefit is the present value of the stream of energy savings accrue once the equipment loan has been paid.
Energy savings	Energy savings will vary depending on the equipment being installed.
Applications & limitations	No limitations
Practical notes	While a treatment facility's accounting department can typically manage the loan structure for an energy efficiency investment, due diligence will require an estimate of energy savings from a reliable energy efficiency engineer. External resources such as energy service companies are also available to facilitate this type of loan agreement. A detailed assessment of the present operating conditions and proposed design conditions is necessary. The assessment should identify existing conditions, low-flow conditions and proposed 20-year design conditions. The full range of operation should be considered when selecting
Other benefits	Under a properly structured loan, the facility experiences only positive cash flow, i.e., the energy savings exceed the loan repayment cost.
Stages of acceptance	This best practice is gaining acceptance as water/wastewater systems come to understand how energy savings can pay for even major investments.

G6 – Use lifecycle cost analysis for purchase selection

Facility management should utilize lifecycle cost analysis when assessing and purchasing equipment, rather than selecting equipment based on the lowest upfront cost. Lifecycle cost analysis incorporates the energy efficiency of the unit over the lifetime of the equipment.

Water and wastewater utilities often do not experience the same long-term risks of private companies subject to market economies. Since they are less exposed to economic conditions, they can usually consider long-term projects whose costs can be absorbed in rates over the equipment lifetime. This difference allows them to treat investment decisions on a lifecycle cost basis.

This is especially important for energy efficiency projects since the present value of energy savings over the lifetime can often easily offset the initial capital cost of the energy efficiency improvement.

See also	Not applicable
Primary area/process	This best practice is applicable to all equipment purchases and new-construction investments by water or wastewater facilities. It is particularly valuable when assessing large energy consumers and components operating continuously.
Productivity impact	This best practice has no impact on productivity. Investment costs are generally built into water/wastewater utility rates, which ultimately affect customer costs.
Economic benefit	Evaluating capital projects using lifecycle cost ensures energy savings and total economic benefit are considered.
Energy savings	Energy savings will vary depending on the extent of the improvement.
Applications & limitations	None
Practical notes	This best practice should be implemented for all purchases. An estimate of the equipment lifetime and an understanding of present value concepts, supplied by accounting professionals, can easily provide an estimate of lifecycle cost.
Other benefits	Additional benefits of this practice include lower operating costs, more stable rates and lower long-term costs for ratepayers.
Stages of acceptance	Lifecycle cost analysis is becoming more accepted, particularly where energy costs are high and constitute a major portion of a utility's budget.

G7 – Design flexibility for today and tomorrow

Operation, administration and management personnel should be involved with the planning and design of any improvement and/or expansion to their system. Design and expansion should have the flexibility to serve both current and future system needs. These processes should consider any significant anticipated changes, including energy usage.

See also	Not applicable
Primary area/process	This best practice is applicable to all components of water or wastewater systems.
Productivity impact	The impact should be negligible.
Economic benefit	The selected design of any modifications, improvements or expansions should reflect the highest quality at a reasonable cost. The simple payback for installing several smaller operating units able to manage current system demand, compared with a larger, single unit operating at reduced capacity, is usually one to five years. Flexible operation allows for sequencing and incremental load management often has potential for energy savings.
Energy savings	Energy savings will vary by project but are directly related to a system's ability to follow demand at all points throughout the system's lifetime, compared with being designed only for 20-year peak flows.
Applications & limitations	None
Practical notes	Start by assessing the size and space needed to install multiple smaller units, as compared to one or two larger units. Note continuously operating smaller unit(s) will strain the system less than operating a larger unit periodically.
Other benefits	Having a system operating effectively and efficiently throughout the life of its design, not just at its future design condition, is a value to the system operations. A flexible operating system will also help manage power demand and avoid high billing peaks.
Stages of acceptance	Designers and owners are becoming more knowledgeable and accepting of equipment sized to match existing conditions, as opposed to only considering projected peak design needs.

G8 – Facility energy assessments

An annual energy survey should be a common practice for all water and wastewater systems to identify and prioritize opportunities for improving energy efficiency and considering renewable sources. While the survey should assess major processes, it should also evaluate baseload end uses.

See also	Not applicable
Primary area/process	This practice should examine the entire facility, emphasizing major processes such as pumping, aeration, disinfection and solids management.
Productivity impact	Minor disruption of production may occur in order to observe equipment operation during the survey.
Economic benefit	A survey is conducted to identify opportunities for measures with payback, but it does not provide a payback itself. Payback periods vary with the modification recommended.
Energy savings	A survey only identifies energy-savings potential. The energy savings identified in an assessment of a treatment process will typically range from 10 to 50% of current usage, with some opportunities reaching 65% savings.
Applications & limitations	None
Practical notes	A survey can identify opportunities for energy savings at any facility, regardless of treatment process, facility age or size.
Other benefits	Taking a closer look at operations through a survey leads to greater awareness of energy use at all points of operation.
Resources	The United States Environmental Protection Agency's (EPA) tool for benchmarking wastewater and water utilities is a multi-parameter energy-performance metric allows for comparison of energy use among water-resource recovery facilities (WRRFs). The tool can be accessed through the EPA's ENERGY STAR® Portfolio Manager platform (see link below). Portfolio Manager is an interactive web-based energy management system allows building managers and water/wastewater operators to track and assess energy consumption and carbon footprint. Portfolio Manager is appropriate for primary, secondary and advanced treatment plants with or without nutrient removal. The tool is applicable to WRRFs with design flows of 1 MGD or more. After inputting the following facility information into the Portfolio Manager platform, the tool produces an energy use "score" relative to the scores of a national population of WRRFs, expressed on a scale of 1 to 100. This score is determined using the following categories: • Average influent flow • Average influent biological oxygen demand • Average effluent biological oxygen demand • Plant-design flow rate • Presence of fixed-film trickle filtration process Presence of nutrient-removal process The tool can be accessed at http://www.energystar.gov/buildings.

G9 – Pump-station assessments

Water and wastewater systems should develop an energy efficiency assessment of each of their pump stations. Design codes require a variety of flow-rate conditions to be achieved. As a result, water/wastewater utilities select most pumps with the intent to meet peak-flow conditions. They also typically provide a redundant backup unit for emergencies or unforeseen peaks. This results in many pumps too large to be energy efficient for most of their daily operating loads.

When selecting pumps, the utility should consider current operating conditions or startup low flows. The utility should determine the power consumption of the pumping system (motor, drive and pump) across the range of pumping rates, from current flow up to design flow. Measured data can be used to construct a pump-performance curve for the installed system. The actual performance curve should be compared to the manufacturer's pump curve. This comparison will provide insight to the energy efficiency of the installed system and support an analysis of savings may be achieved if a motor, pump or drive is added or changed.

Most water/wastewater pump stations can benefit from a variable speed drive or new or additional pump selected based on average and/or low-flow conditions.

See also	G21 – Optimize pump-system efficiency G22 – Reduce pumping flow G23 – Reduce pumping head G24 – Avoid pump-discharge throttling
Primary area/process	This best practice can be applied to all systems with active pump stations.
Productivity impact	There is minimal impact outside of the collection and recording of operating data.
Economic benefit	Payback will vary with each pump station assessed, with respect to size, operating time and schedule.
Energy savings	Energy savings will vary by project but can range from 20 to 50% of current pumping energy. Actual savings will depend on the types of changes being considered.
Applications & limitations	Applied to all pumping systems. No limitations.
Practical notes	A complete analysis is required before deciding which modification(s) to implement.
Other benefits	This practice can provide the facility with improved understanding of the condition of all the components of the pump station. In addition, these modifications can potentially reduce wear and tear on the pumping equipment in the pump station.
Stages of acceptance	Assessing pump stations in water and wastewater systems is a readily accepted practice continually gaining more interest and implementation.

G10 – Real-time energy monitoring

An accurate, real-time energy-monitoring system facilitates the collection and analysis of energy data for each treatment process and pump system at 15-minute intervals. Monitoring enables utility and management staff to develop energy-consumption baselines for various end uses. From established baselines, staff can identify opportunities, set energy-reduction goals and monitor/verify results.

See also	Not applicable
Primary area/process	Monitoring technology can be applied to any process-treatment system and is most beneficial for high-energy-consuming processes, especially those with variable loads.
Productivity impact	No impact
Economic benefit	Economic payback depends on the cost of the monitoring system and the system's ability to help identify savings opportunities. Payback may also be affected if the monitoring equipment can control the system's operating parameters.
Energy savings	The achievable range of energy savings is typically 5 to 20% at facilities where energy efficiency is viewed as an ongoing function.
Applications & limitations	Each site must be individually assessed to identify which processes will benefit the most from monitoring.
Practical notes	The greatest barrier to implementation is acquiring management approval for the monitoring equipment. Facility managers should include the potential savings from energy management in the payback calculations needed to justify the investment.
Other benefits	Monitoring can also support other functions, such as load management, maintenance and the identification of failing equipment.
Stages of acceptance	This measure is well known but not widely practiced since it is usually not necessary for meeting system-performance goals (effluent limits), nor is it required by design codes.

G11 – Supervisory control and data acquisition (SCADA)

Supervisory Control and Data Acquisition (SCADA) systems refer to the hardware and software systems allowing operators of distribution, collection and treatment systems to remotely monitor field parameters and equipment operation and to adjust process parameters. SCADA systems provide the human-machine interface enabling operators to interact more readily with the various electronic monitors and controls used in water and wastewater systems. SCADA can improve energy use tracking with routine energy "benchmarking," through:

- Monitoring energy use over time, including comparisons with process variables or key performance indicators such as flow rate, chemical use, pounds of BOD and pounds of TSS
- Offsetting loads and controlling motor operating times to manage peak electric demand

See also	G19 – Automate to monitor and control
Primary area/process	This practice affects a facility's instrumentation and controls.
Productivity impact	The facility should expect minimum impact after installation. Control systems should also improve system performance.
Economic benefit	Payback varies significantly depending on the extent and complexity of the monitoring and control system installed.
Energy savings	Typically, energy savings result from the ability to match equipment performance to the real-time demands of the system.
Applications & limitations	The capital investment required to implement a SCADA system can be cost- prohibitive for some smaller utilities. Utilities already using SCADA will incur additional capital costs for adding energy-monitoring capabilities and developing energy-benchmarking reports.
Practical notes	An understanding of energy consumption through monitoring and tracking can make energy management less complicated.
Other benefits	Use of a SCADA system for equipment and process control can benefit the entire water and/or wastewater system by highlighting problem areas.
Stages of acceptance	SCADA systems are widely accepted in the water and wastewater industry. Cost is often the greatest barrier to adoption.

G12 – Electric peak reduction

Management of peak demand (shifting to off-peak or shaving peak-power usage) can substantially lower energy costs. The following can be done to optimize power use and reduce electric peak demand:

- Assess electric bills to understand demand charges and examine facility operations to determine ways to reduce peak demand. Ask your electric utility account representative for a 15-minute demand profile to better understand when your peak demand occurs.
- Develop an operation strategy meeting overall system demand and minimizes pumping and specific treatment processes during peak demand periods. Consider adding storage capacity or delaying the time of operation of non-critical treatment processes.
- Assess the typical and peak operations of a water and/or wastewater system to identify areas where peak demand can be trimmed or shifted

See also	G3 – Manage electric-rate structure G14 – Idle or turn off equipment
Primary area/process	All energy-using components of water and wastewater systems, with a focus on the supply side, are candidates for off-peak operation. For example, the following actions can be taken to reduce energy usage: **Water systems** • Pump at rates to meet water demand, avoiding peak power periods where possible (refill storage tanks only when necessary) • Ensure all storage tanks are full prior to peak demand periods • Monitor on/off levels in storage tanks to reduce energy usage **Wastewater systems** • Operate sludge presses during off-peak times • Shift recycling to off-peak periods • Load or feed anaerobic digesters off-peak, so supernatant does not recycle during peak periods • Operate mixers or aerators in aerobic digesters during off-peak times • Accept or treat hauled-in wastes during off-peak times
Productivity impact	No impact
Economic benefit	Paybacks are typically less than one year because modifications are generally procedural and not expensive.
Energy savings	Energy use savings (kWh) are generally minor. Most savings result from reduced demand (kW) for peak power.
Applications & limitations	The application of this practice may be limited by the amount of storage available and the minimum power requirement for necessary operations. Substantial savings are more likely with a time-of-use rate. Smaller facilities may not be charged separately for on-peak demand.
Practical notes	An understanding of the relationships between peak power demand and the demands of water supply and wastewater treatment are necessary to make this measure effective.
Other benefits	The benefits include an improved use of system components.
Stages of acceptance	Understanding electric usage helps customers manage their electric loads according to their specific electric utility-rate structures. Most water and wastewater utilities are aware of this but may not be optimizing operations to fit the rates.

G13 – Sequence backwash cycles

A filtration system can have high energy consumption and high peak power demand. The highest energy users in filtration systems are typically backwash pumps and the aeration blower if it uses an air-assisted backwash system. Operators should consider sequencing and shifting the backwash cycles to off-peak periods to reduce the electric peak demand. In some applications, it is possible to pump at a lower rate over a longer period to a water-storage tank located at a higher elevation and backwash using gravity flow. In addition, if the backwash system includes air-assist capabilities, the facility should determine if the blower size could also be reduced.

See also	Not applicable
Primary area/process	Single media or multimedia granular or membrane filtration systems are applied to water systems and utilized in tertiary treatment in wastewater systems.
Productivity impact	Productivity should not be impacted by the sequencing of backwash cycles. The primary concern should be ensuring availability of enough filtration capacity.
Economic benefit	Savings will result from a lower peak electric demand due to the shifted and staggered operation of backwash pumps and/or an aeration blower.
Energy savings	Energy savings (kWh) are generally minor. Utility-bill savings result from reduced peak demand (kW).
Applications & limitations	Backwashing during off-peak time can affect staffing needs and labor as operators must be present.
Practical notes	None
Other benefits	Sequencing of backwash cycles provides a more stable and constant operation of filter units. Backwashing during electric off-peak times also provides an opportunity to treat the backwash wastewater during off-peak times.
Stages of acceptance	Sequencing of backwash cycles is an accepted practice in both the water and wastewater industry.

G14 – Idle or turn off equipment

When feasible, non-essential equipment should be idled or turned off, especially during periods of peak power demand. Review operations and operating schedules to determine if any equipment is not required for the proper operation of the facility.

See also	G12 – Electric peak reduction
Primary area/process	This practice can be applied to almost all components in a water or wastewater system.
Productivity impact	No impact
Economic benefit	Paybacks are typically short, if not immediate, because only low- or no-cost changes in operational procedures are involved.
Energy savings	Savings depend on the amount of nonessential equipment currently operating. If shutoff occurs during peak power-demand periods, lower power-demand charges will result.
Applications & limitations	Care must be taken not to turn off an essential component of the treatment process, monitoring equipment or warning system. Provide as much automatic control – such as timers – as can feasibly be done in order to reduce the need for operator attention and the potential for operator error. This practice should not undermine compliance with design conditions and regulatory requirements.
Practical notes	Knowing why each piece of equipment is operating and if its operation is critical to the overall performance of the system at any given time may be valuable when trying to reduce peak power-demand charges.
Other benefits	This practice can also result in increased equipment life, reduced maintenance and possibly fewer spare parts required.
Stages of acceptance	Water and wastewater utilities are increasingly more willing to turn off equipment once they understand system requirements can still be achieved.

G15 – Properly maintain motors

A regular program of preventive maintenance can increase motor efficiency and prolong service life. A typical maintenance program should include:

- Performance monitoring, i.e., periodic measurements of power consumed in comparison to an initial baseline
- Measurement of resistance provided by winding
- Insulation inspection (Megger testing)
- Proper lubrication of motor bearings
- Verification of proper motor-coupling alignment or belt alignment and tension
- Cleaning of cooling vents
- Maintenance of protective circuitry, motor starters, controls and other switchgear
- Recording the hours of operation

See also	Not applicable
Primary area/process	This practice should be applied to all electric motors.
Productivity impact	This practice will have no effect except for a minimal disruption during motor maintenance.
Economic benefit	The resources allocated for preventive motor maintenance should be balanced with cost considerations and expected benefits. Preventive maintenance will ensure performance to specifications and longer equipment life.
Energy savings	The energy savings will depend on the status and operating conditions of the system, including the motor equipment.
Applications & limitations	No limitations
Practical notes	None
Other benefits	Preventive maintenance benefits all processes in a water/wastewater system and reduces operation and maintenance costs.
Stages of acceptance	Preventive maintenance of electric motors is a recognized best practice in the water and wastewater industry.

G16 – Correctly size motors

The facility should select the proper-size motor for each specific application, especially where load factors are relatively constant. Motors should be sized to run primarily in the 65 to 100% load range. In applications requiring larger motors to meet peak process loads, alternative strategies should be considered such as the use of a correctly sized motor backed up with a larger motor only operating during process peak-demand periods.

See also	G17 – Install high-efficiency motors
Primary area/process	This practice should be applied to all electric motors. Minimal impact during installation
Productivity impact	Minimal impact during installation
Economic benefit	Savings will vary depending on motor size and application.
Energy savings	Savings will vary depending on motor size and application.
Applications & limitations	No limitations
Practical notes	Many motors are larger than necessary for average loading conditions, thereby wasting energy when a smaller motor could be used. Oversized motors can also result in a lower power factor. Motors oversized by more than 50% should be replaced with correctly sized, high-efficiency or premium-efficiency motors.
Other benefits	None
Stages of acceptance	Not applicable
Results	The Department of Energy has developed MotorMaster+, a popular motor selection and management tool. This free software includes a catalog of more than 25,000 A/C motors and features motor inventory-management tools, maintenance- log tracking, predictive maintenance testing, energy efficiency analysis, savings-evaluation capabilities and environmental reporting. The motor load and efficiency values are automatically determined when measured values are entered into the software. MotorMaster+ can quickly help water/wastewater systems identify inefficient or oversized motors and readily calculate the savings able to be achieved with more energy-efficient models. To download MotorMaster+, visit: https://www.energy.gov/eere/amo/downloads/motormaster-tool

G17 – Install high-efficiency motors

Facility personnel should survey existing motors for possible replacement with new premium-efficiency motors and specify the most energy-efficient motors on all new installed and inventoried equipment. The facility should establish an emergency motor-replacement program specifies energy-efficient motors. As a backup measure, facility personnel should identify a local motor supplier with inventory of the most energy-efficient motors for all process-installation conditions.

See also	G16 – Correctly size motors G18 – Variable frequency drive applications G19 – Automate to monitor and control
Primary area/process	This practice can be applied to all electric motors, especially on well and booster pumps for water systems, on wastewater facility motors with high annual operating hours, and for those operating during peak hours. These include aeration blowers, disinfection systems, pumps and clarifiers.
Productivity impact	Facility-operation managers should expect minor impact due to the brief shutdown for removal and replacement of the existing motor.
Economic benefit	The simple payback is generally short – often less than two years – if the motor operates continuously. However, if the equipment's annual hours of operation are minimal, the simple payback period may be longer.
Energy savings	Savings will range between 5 and 10% of the energy used by the motor being replaced.
Applications & limitations	The physical characteristics and ambient conditions of the existing motor must be considered when replacing a motor. For example, the new motor may have to be explosion-proof, spark-resistant or have immersion capability (flooding conditions).
Practical notes	Typically, when an existing motor is replaced or needs to undergo major repairs, a premium-efficiency motor is used. Often, such as under conditions of high annual operating hours, it may be worthwhile to replace a working motor. In any case, facility management should determine if it is economically justifiable to replace older motors instead of repairing them. The size of the existing machine should be assessed to determine if it has the operating range to be energy efficient. Often a machine may be oversized to meet maximum design flow even if the system may never reach that flow. Adding a smaller machine to process average or low flow while keeping the large machine in place to meet maximum design-flow requirements may be advantageous. When planning a motor replacement, the project team should keep in mind a premium-efficiency motor may require a longer delivery time than a standard or high-efficiency motor of the same size and should allow adequate time in the project schedule.
Other benefits	An additional benefit to this practice is a reduction in emissions from the power source (electric utility).
Stages of acceptance	Energy efficient motors are a well-known, proven, and accepted technology.

Figure 5: Motor Lifecycle Cost

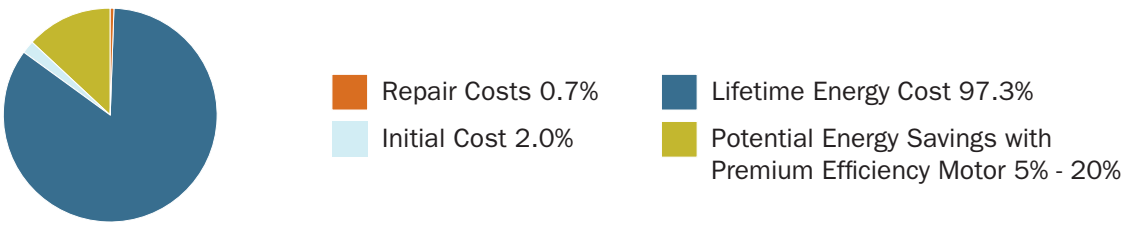

G18 – Variable frequency drive applications

Variable frequency drives (VFDs) match motor-output speeds to the specific load and avoid running at constant full power, thereby reducing energy usage. The equipment must be designed so it can operate at peak flows. Peak-load designs often do not allow for energy-efficient operation at average or low-flow conditions. Operators should assess variations in facility flows, including organic loading, and apply VFDs, particularly where peak-process demands are significantly higher than average or low demand, and where the motor can run at partial loads.

See also	G19 – Automate to monitor and control
Primary area/process	VFDs apply to most processes in water and wastewater systems where loading conditions fluctuate. They can replace throttling valves on discharge piping, control the pumping rate of a process pump, control conveyance pressure in force mains, control airflow rates from blowers, and control the speed of oxidation ditch drives.
Productivity impact	The impact should be minimal with interruption of service only during installation, startup and fine-tuning.
Economic benefit	VFDs are more available and affordable than in previous years with paybacks usually ranging from six months to five years. The payback period will vary with the application depending on the size of the drive, hours of operation and variation in load. Large drives, long hours and high load variability yield the highest savings.
Energy savings	Savings vary with application and technology. Many VFD retrofits result in savings of 15 to 35%. In some installations, particularly where throttling is used to control flow, savings of 10 to 40% are possible. Applied to a wastewater secondary-treatment process, a VFD can save more than 50% of the process's energy use.
Applications & limitations	Applications for VFDs include controlling pressure, daily demand (gpm), fire flow, and well recovery and replenishment. Other applications include controlling aeration blowers, the pumping rate of raw sewage and sludge processing.
Practical notes	Energy-saving calculations accounting for load variation can demonstrate the benefit and help justify the cost. The system should be assessed by an expert before selecting and installing the VFD to ensure system compatibility and cost-effectiveness. VFDs allow operators to fine-tune their collection, conveyance and treatment processes.
Other benefits	Associated benefits include better control of system-flow rate and pressure, more consistent supply and increased flexibility to meet demand requirements with minimum energy use. Matching drives to loads puts less stress on equipment and may reduce maintenance. Better control of process flows can also reduce chemical usage. In addition, reduced emissions from the power source can be directly related to the reduced consumption of electrical power.
Stages of acceptance	VFDs are widely accepted and proven effective in the water and wastewater industry. New and upgraded water and wastewater systems are commonly equipped with VFDs for most system applications.

G19 – Automate to monitor and control

The facility should monitor specific process-control values such as dissolved oxygen, pressure and flow rate, use automatic controls on motors where feasible, and record system functions in order to optimize motor-energy usage while responding to varying loads.

See also	G11 – Supervisory Control and Data Acquisition (SCADA) G17 – Install high-efficiency motors G18 – Variable frequency drive applications
Primary area/process	Automatic controls apply to many aspects of water and wastewater systems.
Productivity impact	The facility should expect minimum impact except for a temporary disruption during the installation of the control system. This minor disruption is mitigated by high future returns in operational control and system performance.
Economic benefit	Payback varies significantly depending on the complexity of the controls required and the variability of the flows and loadings.
Energy savings	Typically, energy savings result from the ability to match equipment performance to the real-time demands of the treatment, distribution or collection system. For example, a facility can integrate variable frequency drives with dissolved-oxygen probes to reduce energy consumption.
Applications & limitations	Control technologies vary in complexity from simple applications – such as timing clocks preventing large equipment from operating during peak hours – to more involved systems controlling equipment operation based on several variables. Examples of more complex systems include filter-backwash monitoring and automatic monitors informing the control of blower speed according to dissolved oxygen levels.
Practical notes	Care must be taken in the design and installation of any automatic control system to ensure it is fully integrated and can meet operational requirements, especially in emergency situations. Make sure system components needed for emergency situations are available. Look for vendors with process and control experience to optimize the entire system.
Other benefits	The use of automatic monitoring and control systems to operate a facility may lead to a deeper understanding of facility operations.
Stages of acceptance	Acceptance of automatic monitoring and controls in the water and wastewater industry is increasing with simple applications being viewed as “safer” and more complex applications slowly gaining acceptance.

G20 – Improve power factor

Improve the power factor of electric motors by minimizing the operation of idling or lightly loaded motors in order to avoid operation above their rated voltage. This can be done by replacing inefficient motors with energy-efficient motors operating near their rated capacity and installing power-factor correction capacitors.

See also	Not applicable
Primary area/process	This practice should be applied to all electric motors. Minimal impact during installation if motors are replaced
Productivity impact	Electric utility-bill savings will occur due to a lower utility service charge but not from reduced energy costs.
Economic benefit	See above
Energy savings	The installation of either single or multiple banks of power-factor capacitors is especially beneficial in facilities with larger motors. Many electric utility companies charge the facility if the power factor is less than 0.95.
Applications & limitations	Periodic monitoring of power efficiency and load factors can provide valuable information regarding inefficient motor operation or potential motor failure. A motor's efficiency tends to decrease significantly when operated below 50% of its rated load, and the power factor also tends to drop off at partial load.
Practical notes	Replace motors significantly oversized with more efficient, properly sized motors.
Other benefits	Motors and drives require proper, routine maintenance to ensure they are operating at optimum performance. Systematic monitoring of power efficiency and load factors can provide valuable information, including an awareness of inefficient motor operation or potential motor failure.
Stages of acceptance	This is standard practice, and utilities seek to have their customers improve the power factor on their systems

G21 – Optimize pump system efficiency

The utility should determine the optimum operational conditions for each pump and perform a system analysis. This analysis should include the startup flows (present low flows) and evolution toward the design-flow capacity. Design flow is the system capacity based on a 20-year forecast of flow. An estimated peaking factor indicates the range of flow(s) and head conditions required to meet the conditions and specifications of the system design.

The utility should select the pump or combination of pumps providing a peak efficiency operating point relative to the common operation condition of the pump. Consider operating a single pump, multiple pumps, multiple pumps of different capacities and the use of VFDs. The utility can confirm the equipment-system selection by calculating the wire-to-water efficiency of each equipment system option under consideration.

See also	G18 – Variable frequency drive applications G22 – Reduce pumping flow G23 – Reduce pumping head
Primary area/process	This best practice should be applied to all water- and/or wastewater-pumping applications.
Productivity impact	Optimizing pumping systems can reduce unscheduled downtime, reduce seal replacement costs and improve process-treatment efficiency and effectiveness.
Economic benefit	The payback period depends on site specifics and whether this practice is applied to a new design or retrofit. With a new facility, the payback period should be less than two years; in retrofit conditions, payback typically ranges from three months up to three years.
Energy savings	The energy saved will vary with the installation; 15 to 30% is typical, with up to 70% possible in retrofit situations where a service area has not grown as forecast, or projected operating conditions have not been met.
Applications & limitations	No limitations
Practical notes	Many computer models can help with the analysis. The model should address both static and dynamic conditions and present and future pumping conditions.
Other benefits	Generally, improved pumping systems provide better treatment-system control.
Stages of acceptance	The technologies used to analyze pumping systems are readily available, and their use is widely accepted.

The Department of Energy (DOE) has developed a tool – the Pump System Assessment Tool (PSAT) — able to be used together with the Hydraulic Institute's Achievable Efficiency Estimate Curves to determine the achievable and optimum efficiencies for the selected pump type, as well as correction factors for specific operating conditions. This method can be used to calculate the energy savings based on the difference between the anticipated energy use of a high-efficiency pump and the baseline energy use associated with inefficient or oversized proposed or existing pumps.

Find the Pump System Assessment Tool at the following link:

- http://www.energy.gov/eere/amo/articles/pumping-system-assessment-tool.

For additional information on pumping efficiency and wire-to-water insight visit:

Resources

- ANSI/HI 11.6-2012 – American National Standard for Hydraulic Performance, Hydrostatic pressure, mechanical and electrical acceptance tests of Rotodynamic Submersible Pumps: http://estore.pumps.org/Standards/Centrifugal/SubmersibleTestPDF.aspx
- ANSI/HI 14/6 -2011 – American National Standard for Hydraulic Performance Acceptance Tests of Rotodynamic Pumps – Appendix G of this document is dedicated to wire-to-water testing: http://estore.pumps.org/Standards/Rotodynamic/TestsPDF.aspx
- HI 40.6-2014 – Hydraulic Institute Standard for Methods for Rotodynamic Pump Efficiency Testing – This standard was developed for the forthcoming DOE Pump Energy Conservation Standard and is a normative reference for determining wire- to-water efficiency of a unit under test.: http://estore.pumps.org/Standards/Rotodynamic/EfficiencyTestsPDF.aspx

Additional Resources:

- Optimizing Pumping Systems: A Guide to Improved Efficiency, Reliability and Profitability: http://estore.pumps.org/Guidebooks/OPS.aspx
- Pump Application Guideline: Wastewater Treatment Plant Pumps: http://estore.pumps.org/Guidebooks/WW.aspx

G22 – Reduce pumping flow

Facility operators should actively manage and reduce, where possible, pumping-flow rates. Because the energy use of a pump is directly proportional to the pump-flow rate, operators should compare the facility's design-flow rate with current flow rate and evaluate whether or not system conditions have changed in a way making it feasible to reduce pumping rates.

In some applications (e.g., pumping to a storage tank), it is possible to pump at a lower flow rate over a longer period, allowing the pump to operate at a point on the pump curve optimal for energy efficiency.

Water-conservation measures – such as the reduction of infiltration and inflow or leak detection and repairs to the water-distribution system – can also reduce the required flow rate.

See also	G21 – Optimize pump-system efficiency W5 – System leak detection and repair W7 – Promote water conservation W8 – Landscape irrigation reduction program
Primary area/process	This energy-saving practice can be applied to all pumping systems.
Productivity impact	No impact
Economic benefit	The estimated payback will vary with improvements and comparison against a base alternative. While load shifting and demand flattening (pumping at a lower rate over a longer period) do not necessarily result in reduced energy use, they do result in reduced electricity bills (peak- demand savings).
Energy savings	The potential savings will vary with the type of modifications being considered.
Applications & limitations	This applies to all pumping systems.
Practical notes	A detailed evaluation should be completed to identify the potential energy savings for each installation.
Other benefits	None
Stages of acceptance	While the concept is understood, implementing this practice often requires measurement and analysis not immediately practicable for some utilities.

G23 – Reduce pumping head

Operators should aim to reduce the total system-head losses, which include static-head and friction-head losses (due to velocity, bends, fittings, valves, pipe length, diameter and roughness). Energy use in a pump system is directly proportional to the head, and the facility can take the following steps to analyze and improve pump efficiency:

- Plot the system curve at the time of installation
- Compare output on the certified curve for pump model and size
- Calculate the system efficiency and save for future reference
- Plot the system curve on a yearly basis; examine and re-plot at shorter time periods if problems develop
- Avoid throttling valves to control the flow rate
- Run higher wet-well level on the suction side, if practical
- Increase pipeline size and/or decrease pipe roughness
- Modify header configuration to minimize fittings

See also	G21 – Optimize pump-system efficiency G24 – Avoid pump-discharge throttling
Primary area/process	This practice should be applied to all pump systems.
Productivity impact	No impact
Economic benefit	The estimated payback will vary with the extent of the improvements and the comparison against a base alternative.
Energy savings	The potential savings will vary with the type of modifications being considered.
Applications & limitations	This best practice is applicable to all pumping systems. Note reducing the head too much may result in the pump running to the far right of the best efficiency point on the pump curve, which could result in inefficient operation and/or cavitation.
Practical notes	A detailed evaluation should be completed to identify the potential energy savings for each installation.
Other benefits	Additional benefits of this practice include reduced pump wear, longer service life and less required maintenance.
Stages of acceptance	Reducing the head on pumping systems is widely accepted in the water and wastewater industry.

G24 – Avoid pump-discharge throttling

The facility should modify the operation of a pumping system to eliminate the use of discharge valve throttling to control the flow rate from pumps. As an alternative, the facility may consider energy-efficient variable-speed-drive technologies – such as VFDs – or the utilization of a low-capacity pump.

See also	G18 – Variable frequency drive applications
Primary area/process	This technology is most often applied to well and booster-pump discharges. However, it also is used in wastewater-pump stations.
Productivity impact	No impact
Economic benefit	Payback varies by application and may be less than one year if the pump run-time is high and valve closure is significant. However, the measure savings can be as low as 15% of total energy consumption if the pump has low hours of operation and the throttling valve is minimally closed.
Energy savings	Energy savings can exceed 50% of pumping energy in some cases. Actual energy savings depend on the amount of closure of the throttling valve.
Applications & limitations	Applied to all locations currently using valves to control flows.
Practical notes	A detailed evaluation should be completed to identify the potential energy savings for each installation, giving some consideration to the use of a VFD and/or smaller-sized pumps.
Other benefits	Additional benefits of VFDs are reduced pump wear, longer service life, less required maintenance, and the ability to quickly and easily adjust flow as changes occur in the distribution system or in the ability of a well to recharge.
Stages of acceptance	The water/wastewater industry accepts the use of VFDs to replace throttling valves in order to reduce energy consumption and provide improved control of the pump.

G25 – Ultraviolet (UV) disinfection options

The facility should consider various UV disinfection system design or redesign options able to reduce the number of lights (bulbs), change bulb orientation, change bulb type (pressure and intensity), adjust the turndown ratio (bank size and bulb-output variability), and apply dose-pacing control (in which system output is automatically controlled to achieve disinfection requirement).

See also	Not applicable
Primary area/process	UV disinfection options can apply to both water and wastewater systems.
Productivity impact	There may be a minor impact on productivity during the installation of any improvements.
Economic benefit	Payback will vary depending on the following: current type of UV system in use, range of energy efficiency renovations available, peak design and average flow to be treated, disinfection limit and upstream-treatment processes, and current and future energy costs.
Energy savings	Energy savings from UV result when the number of lamps "on" and lamp output are paced based on flow rate and transmittance. Current technology, low-pressure, high-output UV lamps use, on average, about half of the energy of medium-pressure lamps. Typical energy requirements for low-pressure, high-output systems range from 2.0 to 4.0 kWh/MGD while medium-pressure systems use from 5.0 to 8.0 kWh/MGD. Systems employing effective sleeve cleaning alone can save up to 15% of UV-system energy consumption.
Applications & limitations	Yearly energy savings may be lower for systems operating seasonally due to limited annual hours of operation.
Practical notes	Medium-pressure lamps convert a lower percentage of the power they consume into useful UV light (roughly 13% versus 35%) compared with low-pressure/high-output lamps (LPHO). In addition, medium-pressure lamps previously provided a much lower turndown capability as compared to present low-pressure/high-output lamps. Consequently, an existing medium-pressure system may use significantly more energy than a new LPHO retrofit. Including an automatic cleaning (wiping) system ensuring the quartz sleeves stay clean and the maximum amount of UV can be transferred, which improves energy efficiency. In recent years, higher-output LPHO lamps have been developed with the same turndown ratio as medium-pressure lamps (up to 1 kW in input power). These newer, higher-power lamps can now replace a medium-pressure lamp system on a one-to-one lamp-count basis.
Other benefits	Installation of an UV system usually replaces a chlorination system, thereby eliminating on-site storage of chlorine, which can be either a hazardous gas or corrosive liquid. Additionally, using UV disinfection reduces the potential for trihalomethane (THM) formation in the distribution system resulting from disinfection byproduct precursors in the water.
Stages of acceptance	Many varieties and configurations of UV disinfection systems are accepted and in use throughout the water and wastewater industry.

G26 – Incorporate energy efficiency in membrane-treatment systems

Membrane bioreactor technology (MBR) is becoming a more popular water- or wastewater-treatment option when stringent water-quality standards must be achieved. Facilities utilizing MBR technology should be sure to consider energy efficiency in their system selection and design.

MBR is a physical treatment option consisting of microfiltration, ultra-filtration, nano-filtration, reverse osmosis or a combination of two or more of these systems, depending on the water-quality standards needing to be met. MBR technology can provide specific advantages such as reduced building-size requirements, improved staging implementation and the flexibility to custom-design MBR to meet treatment requirements. However, MBR can present challenges in incorporating energy efficiency in planning and design.

To ensure an energy-efficient treatment system, the utility should select the best flux-rate membrane for their application. The MBR design should be kept as simple as possible, incorporate reduced air scour during backwashing and include adequate turndown capability (be sized to meet current flows and design flows in an energy-efficient way).

See also	G4 – Include energy efficiency in capital improvement and operations plans
Primary area/process	This practice affects any water- or wastewater-treatment facility utilizing or is considering MBR technology, particularly those with stringent quality requirements.
Productivity impact	Installation of MBR can be done without interrupting the operation of the system and including energy efficiency in the MBR design should not affect the level of impact.
Economic benefit	Payback will vary depending on the specific MBR design and its application as a retrofit or new system.
Energy savings	Energy savings will depend on the efficiency of the treatment system being retrofitted or the alternative new baseline treatment system with which it is being compared.
Applications & limitations	The MBR-treatment option is particularly advantageous for treatment facilities with limiting site conditions, poor water quality and stringent treatment requirements. For those facilities choosing to utilize MBR, it is important to include energy efficiency considerations in the system selection and design process.
Practical notes	For utilities which the technology is a viable option and can include energy efficiency considerations in the design, MBR is an acceptable choice because its capital cost is becoming more competitive compared with other options able to meet stringent water-quality requirements.
Other benefits	MBR systems have smaller space requirements, can be automatically operated, are highly reliable, are more adaptable to phased implementation, and can include a variety of membrane options to meet specific site requirements.
Stages of acceptance	Membrane technology is an acceptable treatment option able to include energy efficiency considerations in the system design and is gaining acceptance as treatment requirements become more stringent.

G27 – Energy education for facility personnel

All personnel should understand the relationship between energy usage and facility operations. Information can be found in various publications, including this handbook, and through training.

See also	Not applicable
Primary area/process	This practice focuses on personnel, especially those who make both long- and short-term decisions affecting energy use (including elected officials). All parties involved in the operation of a water treatment and distribution system and a wastewater conveyance and treatment facility can benefit from understanding the system's energy consumption.
Productivity impact	No impact
Economic benefit	There is no direct return on investment for this practice. The return is a function of actual process changes and/or operational changes made in response to recommendations from the educational material and/or classes.
Energy savings	The energy savings for this practice will vary substantially depending on what measures are implemented.
Applications & limitations	No limitations
Practical notes	It is useful to establish an annual schedule for energy training to keep facility management and personnel up to date on available technology and management practices.
Other benefits	Staff members and colleagues within the industry typically share and discuss information they gain from attending education classes and reading publications.
Stages of acceptance	Education and training are common and widely accepted throughout the industry.

G28 – Ensure plant personnel receive and understand monthly energy bills

All superintendents/operators should receive and review their system's monthly energy bills. Energy bills are often sent directly to the business office of the utility where they are opened, reviewed and paid. Most superintendents and operators never see these energy bills and miss the opportunity to gain valuable insight into operations and budgets.

Billing information, critical to understanding the impact of energy costs, includes peak and off-peak consumption (kWh) and peak demand (kW), time of peak, unit costs for peak and off-peak use, and the monthly demand charge component. The energy provider shows 15- or 30-minute demand values. This information can show how the system is operating and indicate potential anomalies, such as excessive, unexplainable consumption. Comparing energy and demand usage data from energy utility bills with data on influent flow and organic strength can broaden the operator's understanding of the operation. Where practical, plant process efficiency should be part of a manager's overall performance evaluation.

See also	Appendix A: Understanding the electric bill
Primary area/process	This practice should be applied to all water and wastewater systems. Monthly reviews and assessments should be completed, and trend graphs continually updated.
Productivity impact	No impact
Economic benefit	Economic benefit will vary depending on the aggressiveness of the program, the extent of potential operational changes, and the availability of capital investment funding when needed.
Energy savings	Energy savings will vary depending on the actions taken as a result of reviewing energy-bill information. An action can be as simple as changing the timing of a unit process's operation (shifting demand to off-peak), or as involved as replacing constant-speed motors with variable frequency drives.
Applications & limitations	No limitations
Practical notes	This best practice has no limitations. Managers of all sizes of water and wastewater systems should understand when and how their systems consume energy.
Other benefits	A better understanding of energy bills often results in more attention to the sequence of operations. Water- and wastewater-treatment schedules can be optimized according to the time of operation.
Stages of acceptance	Increasingly, water and wastewater utilities understand the value of the information they receive from their energy provider.

WATER TREATMENT BEST PRACTICES

Table of contents

Operations and scheduling		
W1	Integrate system demand and power demand in system designs	62
W2	Computer-assisted design and operation	63
W3	Manage well production and drawdown	64
W4	Sequence well operation	65

Measures		
W5	System-leak detection and repair	66
W6	Optimize storage capacity	67

Water-demand management		
W7	Promote water conservation	68
W8	Landscape-irrigation reduction program	69
W9	Manage high-volume users	70

* Ultraviolet (UV) Disinfection Options Best Practices presented in G25

Index

The following table shows the typical energy savings and payback periods for the Best Practices found in this section, grouped by category, and includes three blank columns for you to complete as you analyze each practice. You can utilize this checklist to track the process of reviewing these Best Practices and note which are feasible for your utility.

	BEST PRACTICES	TYPICAL ENERGY SAVINGS OF UNIT OF PROCESS (%)	TYPICAL PAYBACK YEARS	BEST PRACTICE FEASIBLE? (YES/NO)	DATE ANALYZED	FURTHER REVIEW NEEDED? (YES/NO)
Operations/scheduling						
W1	Integrate system demand and power demand in system designs	Variable	Variable			
W2	Computer-assisted design and operation	Variable	Variable			
W3	Manage well production and drawdown	Variable	Variable			
W4	Sequence well operation	Variable	Variable			
Measures						
W5	System-leak detection and repair	Variable	Variable			
W6	Optimize storage capacity	Variable	Variable			
Water-demand management						
W7	Promote water conservation	Variable	Variable			
W8	Landscape-irrigation reduction program	Variable	Variable			
W9	Manage high-volume users	Variable	Variable			

W1 – Integrate system demand and power demand in system designs

Facility-management staff should evaluate current system-water demand (water consumption) and electric-power demand (peak and off-peak). The analysis should address residential, commercial, institutional and industrial usage, plus required fire flow. Staff should direct system designers to incorporate energy efficiency best practices in all designs (new and retrofit) to reduce electric-peak demand and energy consumption. For well pumps and booster-pump stations, the utility should consider the feasibility of applying variable speed drives (VSDs) and electric-power monitoring, as well as demand controls, to minimize peak-demand charges. In addition, when selecting booster-station pumps, the utility should compare the flow-rate differential between average flow and peak flows (usually fire flow) and assess if the selected pumps can meet both conditions in an energy-efficient way.

See also	Not applicable
Primary area/process	This best practice includes all electrical components of water supply, treatment and distribution systems.
Productivity impact	Water production and distribution can be expected to improve upon installation of either a new system or retrofit.
Economic benefit	The estimated payback period, which is not tied to the evaluation itself, will vary with the extent of proposed improvements and comparison with a base alternative.
Energy savings	The purpose of the evaluation is to identify potential savings. The potential savings will vary with the types of modifications implemented.
Applications & limitations	The evaluation should advise the comprehensive planning process prior to the development of any improvement project.
Practical notes	Careful evaluation and planning can lower capital costs by ensuring system improvements are appropriate and new/retrofit equipment is compatible with existing system components.
Other benefits	Other benefits of this evaluation include improved production scheduling and the potential for greater environmental compliance. In addition, lower utility costs may result in lower customer bills and more satisfied customers.
Stages of acceptance	Careful planning of system improvements has been a hallmark of the water industry. This practice builds on that concept by incorporating the goal of energy efficiency and peak-demand management.

W2 – Computer-assisted design and operation

The utility should develop a computer model of the water-distribution system to evaluate the impacts of proposed improvements. A system-specific computer model can evaluate potential impacts on the distribution system from changes in pipe size, pumping rates, pump-operating point, system pressure, location of booster pumps, location of storage and variable flow rates. Using this information to adjust system pressures, pumping rates, pump-operating points and operational sequence can improve energy management before making capital investments.

See also	Not applicable
Primary area/process	This practice applies to all water-distribution systems.
Productivity impact	This best practice has no impact on operation or production. Field testing is necessary to calibrate the model to reflect actual field operating conditions.
Economic benefit	Payback will be directly related to the identified opportunities for energy savings. Payback benefits begin when the computer model is used to inform and select energy-efficient measures.
Energy savings	The potential energy savings will vary with the types of modifications being considered.
Applications & limitations	This measure can benefit systems of all sizes. The utility must ensure during the implementation of any changes or adjustments, system pressure is maintained at a sufficient level to meet customer demand, fire flow and code requirements.
Practical notes	Many computer-modeling programs and tools are available to address both static and dynamic conditions. When selecting software, the utility should look for user friendliness and expandability allowing the model to change and grow with the system. Conduct computer-model analyses on planned system modifications to determine which modifications are energy efficient and can benefit the water system.
Other benefits	Computer modeling can help document and justify infrastructure and operational decisions to management. It also provides data for annual reports and information needed for asset management.
Stages of acceptance	Use of modeling technology for operations optimization is well received and widely accepted by the industry.

W3 – Manage well production and drawdown

The water and wastewater utility should monitor, review and track the physical characteristics and operations of each well, including pumping rates, recharge capabilities, drawdown and recharge areas, and develop a performance chart or trend graphs displaying the historic and current conditions.

The utility can use this information to optimize the operation and planning of pumps, motors and control systems. Particularly, the utility should monitor well drawdown during pump operation to detect any production changes over time. Diminishing recharge may expose the potential for pump failure or other mechanical problems and may indicate increased energy consumption. The water level may also drop to a point where pumping is inefficient.

See also	W4 – Sequence well operation
Primary area/process	This practice affects all water systems with wells.
Productivity impact	The impact of this best practice is felt during installation, only if new equipment is necessary. Pump failure or excessive drawdown would eventually lead to impact on water production.
Economic benefit	A short payback is possible if equipment is in place and only requires adjustment. If new equipment, such as VFDs, is required, the payback period will increase.
Energy savings	Energy savings vary widely with the characteristics of each specific component (well, motor, drive, controls) at a site.
Applications & limitations	Metered data helps identify the “best point” for operation, which may make the system more energy efficient. Some utilities may require the assistance of an external consultant.
Practical notes	A strong maintenance program, coupled with monitoring and review, will always provide improved energy management. Maintaining a log of changes and trending results will also support system planning.
Other benefits	Many additional benefits may result from this practice, including lower stress on the system, reduced pumping rate and a reduced electric peak-demand charge. An effective well-management program also allows for scheduled maintenance rather than emergency maintenance, makes fluctuations in the aquifer more predictable, and reduces surprises and emergencies.
Stages of acceptance	This practice is widely accepted in the water industry. However, many utilities do not fully realize the value of monitoring the condition of wells and equipment and how it supports planned, preventative maintenance and minimizes emergency maintenance.

W4 – Sequence well operation

Staff should compile and review all water-production information available on each well at the site, including energy consumption. Staff should become familiar with the functional characteristics and production capability of each well, noting many wells are brought online with equipment sized to achieve full-capacity production, which may not be necessary. From these data, the utility should identify and implement the proper sequence of well operations, beginning with the most energy-efficient well and ending with the least.

See also	W3 – Manage well production and drawdown
Primary area/process	This practice affects water supply and distribution systems served by wells.
Productivity impact	Little or no impact on productivity.
Economic benefit	Payback is typically short because the practice of sequencing well operation usually requires only a low-cost adjustment in procedures rather than a capital investment, unless an automatic control system is required.
Energy savings	Savings vary from system to system depending on the condition of existing equipment and current operations.
Applications & limitations	One limitation to this practice is the possibility water quality and/or distribution issues may require the use of a less energy-efficient well over a more efficient one.
Practical notes	This practice is easy to implement because the data required to perform the analysis are already required for the annual Public Service Commission report.
Other benefits	Utility personnel can more accurately manage energy-efficient well production.
Stages of acceptance	Although this practice is accepted by the industry, not many utilities have adopted it. Generally, this is because its overall value is not fully understood by the utilities.

W5 – System leak detection and repair

The utility should review their system's annual Public Service Commission water reports to determine the amount of unaccounted water. If the amount exceeds "typical" losses for similar facilities, the utility should use leak-detection technology to identify the location of water loss and repair identified leaks. In addition to reducing water loss, repairing leaks can reduce pumping-energy requirements.

Operations and maintenance practices – such as pipe or meter inspection and maintenance programs – are critical. New technology – such as automatic meter-reading technology and computerized maintenance management software – can also be useful in identifying water loss.

See also	G22 – Reduce pumping flow
Primary area/process	This practice is applicable throughout all water-distribution systems.
Productivity impact	There may be minor disruptions during repair and disinfection of the section being repaired before the section is placed back into service.
Economic benefit	Payback varies depending on the size and complexity of the distribution system and the extent of any required repairs. Payback periods tend to be longer than those for other energy efficiency projects since the energy savings may be small when compared to the cost of repairing the leak. The economic evaluation should include the value of the unaccounted water.
Energy savings	Potential energy savings will vary with the number and severity of leaks, as well as system pressure.
Applications & limitations	This practice is applicable to all distribution systems.
Practical notes	The amount of energy saved is small, relative to the cost of repairing leaks in water mains, because excavation in paved areas is expensive.
Other benefits	The Public Service Commission may require water-loss testing in the future. Integrating leak testing with energy efficiency is a strategic way to leverage resources.
Stages of acceptance	Leak detection and repair is standard practice in the industry but has traditionally been viewed as routine maintenance rather than as an energy efficiency practice.

W6 – Optimize storage capacity

The utility should develop a storage-capacity utilization strategy to minimize pumping during peak-demand periods for electric power. The utility should also develop a strategy for pump operation and water distribution to flatten electric demand during the peak periods and shift as much pumping as possible to off-peak periods. This strategy should include the following tactics:

- Track detailed water-demand information by adding metering capabilities to water distribution and transmission lines
- Add or strategically use existing storage capacity to minimize pumping costs during electric-peak demand periods
- Use pressure-sustaining or pressure-reducing valves to assist in maintaining minimum pressure requirements in different regions of the water-distribution system

See also	G22 – Reduce pumping flow
Primary area/process	This practice applies to all water-distribution systems.
Productivity impact	No impact
Economic benefit	Payback will depend on the extent of capital improvements such as the addition of storage capacity. If only operational modifications are implemented, there may be no capital cost.
Energy savings	Any utility-bill savings will result from reduced electric-demand charges and not come from a reduction in energy usage.
Applications & limitations	The capital cost of any additional storage capacity, new valves and addition metering will have to be balanced with expected savings from reduced electric-demand charges. Minimum system pressure during peak-flow periods and for fire-flow protection must be maintained. Regulatory compliance cannot be undermined and should always be the primary goal.
Practical notes	None
Other benefits	Not applicable
Stages of acceptance	This practice is widely accepted by the industry.

W7 – Promote water conservation

Reducing water consumption on the customer side reduces the energy needed to treat and distribute water. Conservation can also assist with managing diurnal and seasonal peak-demand periods. Utilities can promote this by:

- Assessing water-conserving plumbing fixtures and appliances and promote them within the community
- Considering using a multi-tiered residential rate structure charging a higher rate for high consumption (also known as an "inclined block" or "inverted" rate structure)
- Targeting all customer classes – residential, commercial, institutional and industrial
- Offering water-consumption audits for commercial and industrial customers
- Offering financial incentives for commercial and industrial customers to use more water-efficient systems for high water-use applications

See also	G22 – Reduce pumping flow W8 – Landscape-irrigation reduction program
Primary area/process	This best practice targets all water-utility customers, especially those in the field of new construction and renovations requiring permits.
Productivity impact	No impact
Economic benefit	Payback depends on campaign effectiveness, customer behavior changes in water use, and the number of customer measures implemented.
Energy savings	Savings will depend on the number and types of equipment and appliances replaced, as well as changes in consumer behaviors.
Applications & limitations	This promotion effort should target all customers and may be effective for those performing new construction and renovations requiring permits. The utility should be aware a transition from flat rates to metered and/or conservation-rate structures can be politically sensitive and will require significant public education and information. Successful water-conservation programs can reduce revenues for a utility, and the expected rate impact should be factored into fiscal and regulatory planning.
Practical notes	The utility should develop a list of manufacturers making water-conserving equipment and appliances and make it available to all residential, commercial, institutional and industrial customers who inquire. The utility could also consider providing incentives to encourage water conservation, limiting landscape irrigation to overnight hours and providing educational classes on water conservation.
Other benefits	The primary benefit of this practice is the conservation of water, which is a limited, critical resource. An effective program helps consumers adjust to long-term water conservation without major impact on their lifestyles.
Stages of acceptance	Water-conserving fixtures, appliances and practices are widely accepted in the industry and by consumers.

W8 – Landscape irrigation reduction program

Automatically monitored and controlled irrigation systems have been shown to have a major impact on water consumption. The utility should establish a customer program managing landscape irrigation to avoid electric-peak-time water consumption and minimize the duration of sprinkling. Implementing this technology will reduce water consumption.

See also	W7 – Promote water conservation
Primary area/process	This practice affects water consumption and water-distribution systems.
Productivity impact	This best practice has no impact on operations. It may have a beneficial impact on production by reducing well drawdown during poor well-recharge times.
Economic benefit	The payback period will be very short, if not immediate, and will begin when customers reduce their water consumption.
Energy savings	Potential energy savings, derived from reduced pumping costs, will vary with changes in customers' landscape-irrigation habits.
Applications & limitations	While there are no physical limits regarding landscape-irrigation regulations, gaining customer cooperation and enforcing the regulations may present challenges.
Practical notes	The utility must assess year-round use and the potential to affect peak-water consumption through rules regulating time and duration of lawn sprinkling. This effort requires an information campaign backed by enforcement. The water utility can also consider providing guidance for landscaping practice to reduce irrigation requirements (xeriscaping).
Other benefits	The primary benefit of this practice is the conservation of water, which is a limited, critical resource. This practice may also reduce well drawdown.
Stages of acceptance	The effectiveness of this practice is widely understood and accepted. Gaining public acceptance can be a challenge since restricting lawn sprinkling may be viewed as an infringement on personal rights.

W9 – Manage high-volume users

The utility should meet with the ten largest water users in its system to identify potential modifications to customer operations able to reduce their water consumption. The utility should encourage them to adopt and monitor the identified measures and to consider recycling water where applicable.

See also	Not applicable
Primary area/process	This practice applies to water supply and distribution systems.
Productivity impact	There is no impact on the water utility other than the intended reduction in water consumed. Any disruption during implementation would take place at the customers' facilities.
Economic benefit	The payback for the water utility is nominal, since the only cost is for promotion of the program. Customer payback varies with the amount of water conservation and the complexity of the measures needed to achieve the savings.
Energy savings	Energy savings are proportional to the reduction in water use.
Applications & limitations	Since any reduction in water use results in a corresponding reduction in revenue, each water utility has a limit on how much water can be conserved before it becomes necessary to evaluate their user charges and possibly modify the water-utility rates.
Practical notes	The utility should aim to minimize water-utility rate impacts through fiscal planning and regulatory rate development. The utility should also determine if customers' peak usage of water can be shifted to off-peak times for electric and water savings – such as evening and nighttime hours – to reduce costs for both the customer and water utility.
Other benefits	This practice may extend the life of water supply and distribution systems and may also postpone costly future expansions. In industrial applications, it may reduce the customers' cost of producing their product.
Stages of acceptance	This practice is not widely adopted by utilities due to the threat of reduction in utility revenue. Typically, customers respond favorably to this concept, if the suggested measures do not negatively impact production, product quality or operations.

WASTEWATER BEST PRACTICES

Table of contents

Operations and scheduling		
WW1	Operational flexibility	75
WW2	Staging of treatment capacity	76
WW3	Manage for seasonal/tourist peak	77
WW4	Flexible sequencing of basin use	78
WW5	Cover basins to reduce freezing and aerosol or odor emissions	79
WW6	Reduce fresh-water consumption through final effluent recycling	80

Aeration		
WW7	Optimize aeration system	81
WW8	Fine-bubble aeration	82
WW9	Variable blower airflow rate	83
WW10	Dissolved-oxygen control	84
WW11	Cascade aeration	85
WW12	Aerobic digestion option	86
WW13	Blower-technology options	87
WW14	Assess aeration-system configuration	88

Sludge and biosolids		
WW15	Improve solids capture in dissolved air flotation (DAF) system	89
WW16	Evaluate replacing centrifuge with screw press	90
WW17	Consider replacing centrifuge with gravity-belt thickener	91
WW18	Digestion options	92
WW19	Mixing options in aerobic digesters	93
WW20	Mixing options in anaerobic digester	94
WW21	Recover heat from wastewater	95

Special treatment options		
WW22	Anoxic-zone mixing options	96
WW23	Sidestream deammonification	97
WW24	Biotower energy efficiency	99

Biogas enhancement and utilization		
WW25	Optimize anaerobic-digester performance	100
WW26	Use biogas to produce combined heat and/or power (chp)	101
WW27	Assessment of beneficial utilization	102

* Ultraviolet (UV) Disinfection Options Best Practices presented in G25 on Page 55

Index

The following table shows the typical energy savings and payback periods for the Best Practices found in this section, grouped by category, and includes three blank columns for you to complete as you analyze each practice. You can utilize this checklist to track the process of reviewing these Best Practices and note which are feasible for your utility.

	BEST PRACTICES	TYPICAL ENERGY SAVINGS OF UNIT OF PROCESS (%)	TYPICAL PAYBACK YEARS	BEST PRACTICE FEASIBLE? (YES/NO)	DATE ANALYZED	FURTHER REVIEW NEEDED? (YES/NO)
Operations and scheduling						
WW1	Operational flexibility	10 - 25	< 2			
WW2	Staging of treatment capacity	10 - 30	< 2			
WW3	Manage for seasonal/tourist peaks	Variable	4 - 6			
WW4	Flexible sequencing of basin use	15 - 40	2 - 5			
WW5	Cover basins to reduce freezing and aerosol or odor emissions	Variable	Variable			
WW6	Reduce fresh-water consumption through final effluent recycling	10 - 50	2 - 3			
Aeration						
WW7	Optimize aeration system	30 - 70	3 - 7			
WW8	Fine-bubble aeration	20 - 75	1 - 5			
WW9	Variable blower airflow rate	15 - 50	< 3			
WW10	Dissolved-oxygen control	20 - 50	2 - 3			
WW11	Cascade aeration	Variable	Variable			
WW12	Aerobic-digestion options	20 - 50	Variable			
WW13	Blower-technology options	10 - 25	1 - 7			
WW14	Assess aeration-system configuration	Variable	Variable			
Sludge and biosolids						
WW15	Improve solids capture in dissolved air flotation (daf) system	Variable	Variable			
WW16	Evaluate replacing centrifuge with screw press	Variable	Variable			
WW17	Replace centrifuge with gravity-belt thickener	Variable	Variable			
WW18	Digestion options	Variable	Variable			
WW19	Mixing options in aerobic digesters	10 - 50	1 - 3			
WW20	Mixing options in anaerobic digesters	Variable	Variable			
WW21	Recover heat from wastewater	Variable	Variable			
Special treatment options						
WW22	Anoxic-zone mixing options	25 - 50	3 - 5			
WW23	Sidestream deammonification					
WW24	Biotower energy efficiency	15 - 30	Variable			
Biogas enhancement and utilization						
WW25	Optimize anaerobic-digester performance	Variable	Variable			
WW26	Use biogas to produce combined heat and/or power (chp)	Variable	Variable			
WW27	Assessment of beneficial utilization	Variable	Variable			

WW1 – Operational flexibility

The utility should evaluate facility loadings and become familiar with each unit-treatment process and system in order to identify, plan and design the most energy-efficient and effective ways to operate the system while maintaining operational and regulatory requirements. Options to consider include:

- Operating fewer aeration tanks.
- Installing variable frequency drives so equipment operation can match system loadings.
- Installing dissolved-oxygen monitoring and control equipment.
- Reducing airflow to the aeration tanks during low-load periods (usually nights and weekends).
- Waiting to recycle supernatant during lower-flow periods, avoiding periods of high organic loading and peak-electric demand.
- Operating (bumping) diffusers or recycling backwash water during off-peak power-demand periods.
- Installing an extra smaller-capacity pump alongside existing pumps so the facility can meet existing flows, low flows and design flows.

See also	G18 – Variable frequency drive applications WW2 – Staging of treatment capacity WW3 – Manage for seasonal/tourist peaks WW4– Flexible sequencing of basin use WW7 – Optimize aeration system WW10 – Dissolved-oxygen control
Primary area/process	This practice applies to grit removal, secondary-treatment processes, all pumping operations, disinfection systems and biosolids-management systems.
Productivity impact	Implementation usually involves modifications to operations, so there should be little or no impact on productivity.
Economic benefit	Payback is generally within two years since most of the measures are operational adjustments and will not require significant capital costs.
Energy savings	Energy savings will vary depending on the measure. A typical range is from 10 to 25%.
Applications & limitations	All facilities should apply this practice to reduce energy consumption and operating costs.
Practical notes	Having an energy management plan (described in the first section of this handbook) will facilitate this practice. Measures should only be considered when there is flexibility in the facility and they will not negatively impact meeting load or regulatory permit requirements.
Other benefits	Operations personnel will gain a better understanding of the capabilities of the treatment system they control.
Stages of acceptance	Many facility operators accept the need to adjust operations in response to loadings once they learn the value and magnitude of the energy savings available.

WW2 – Staging of treatment capacity

When planning improvements, the utility should establish a team able to determine how modular additions can be staged to meet current and projected treatment and design conditions. Staging construction according to smaller-sized modular equipment so new units can be brought online as needed can both optimize a system's response to treatment demand and allow the facility to better manage energy usage and costs.

For example, the facility could construct two aeration tanks and divide them in half, utilizing half of one tank at startup, ramping up to one whole tank, then to one and a half tanks and, finally, to two tanks. The same concept can be applied to aeration blowers. They can be sized to meet incremental conditions all the way up to 20-year design conditions. If selected in small enough sizes, they may be brought online or offline as air demand changes to meet all conditions from startup to design.

See also	WW1 – Operational flexibility
Primary area/process	Staging is most applicable to the most energy-intensive components of a system, typically the secondary-treatment process, pumping, disinfection and biosolids management.
Productivity impact	Unless capital improvements are required, there should be no disruption to productivity. A system will usually operate most efficiently when loaded closer to its design load; therefore, staged systems will generally function efficiently throughout the life of the improvement.
Economic benefit	The payback period will usually be less than two years because minimal system adjustments are required to implement staging.
Energy savings	Proper staging of treatment capacity can achieve a savings of 10 to 30% of the total energy consumed by a unit process.
Applications & limitations	Staging is applicable to all systems.
Practical notes	Staging usually has a minor impact on construction and scheduling in exchange for the energy savings realized.
Other benefits	An additional benefit to staging is improved control of the system.
Stages of acceptance	Staging of treatment capacity is accepted in the wastewater industry. However, it has not been readily adopted due to the incorrect belief the entire system must be built to 20-year design specifications, rather than added in stages in response to increasing demand.

WW3 – Manage for seasonal/tourist peaks

Flexible system design allows a utility to adjust and operate more energy efficiently during peak tourist loads as well as during the "off-season." In many areas, tourism-related loads can be as much as ten times larger than off-season loads. These variable conditions may require idling treatment units during the off-season.

See also	WW1 – Operational flexibility WW2 – Staging of treatment capacity
Primary area/process	Primary areas of focus are the raw-wastewater pumps, followed by the secondary-treatment processes, disinfection and solids management.
Productivity impact	No impact other than brief interruptions while idled equipment is placed into operation as needed.
Economic benefit	Most retrofit-aeration modifications have paybacks of four to six years. If the concept is integrated into the design of new construction, the payback should be shorter.
Energy savings	Savings will vary but can reach 50% during the off-season.
Applications & limitations	The utility must account for environmental and/or climatic considerations in order to prevent damage to seasonally out-of-service equipment.
Practical notes	This strategy needs to be carefully analyzed to ensure adequate treatment can be provided during the tourist season. The aeration tanks must be sized so they can be idled during the off-season. It helps to review several years of facility-loading data and utility bills to assess seasonal variation and define the peak and off-peak seasons and their respective peak loadings for proper sizing and selection of equipment. Consideration must be given to the proper procedures for idling a tank and the equipment within it, and then placing it back into operation.
Other benefits	If the secondary-treatment process is improved, generally the functions of other processes improve also.
Stages of acceptance	These concepts are well known, understood and widely accepted.

WW4 – Flexible sequencing of basin use

The selection of basin sizes can have a large impact on the energy consumed at a facility during its lifetime. The design team should review the existing and projected organic loadings to select the correct tank sizes. Typically, the use of smaller basins is beneficial so early lifetime loadings can be processed effectively. The remaining basins can then be loaded sequentially as loads increase until design capacity is reached. This approach allows for energy-efficient operation from startup to design-flow conditions.

See also	WW1 – Operational flexibility WW2 – Staging of treatment capacity
Primary area/process	This practice applies to secondary-treatment processes, particularly at activated-sludge treatment facilities.
Productivity impact	No impact
Economic benefit	Payback for constructing multiple tanks will depend on space availability at the site. Implementation can be as simple as adding an interior wall to subdivide an existing tank. This can provide a two- to three-year payback. Payback may take three to five years for major site modifications.
Energy savings	Energy savings of 15 to 40% are common if multiple smaller tanks are available to step the system into operation, compared with having only two large tanks.
Applications & limitations	All facilities should consider operational flexibility in order to manage the continually varying facility loads.
Practical notes	Facility personnel should work closely with designers throughout the design process. Information on the sizes and operation of basins required for a treatment process is invaluable to the selection process. Operating highly loaded smaller tanks, instead of larger under-loaded tanks, is the preferred practice.
Other benefits	This practice improves overall operation of the facility and can reduce other associated treatment costs, by reducing polymer requirements because solids are not over-aerated and fragmented.
Stages of acceptance	Acceptance varies from site to site based on facility-staff preferences and experience with taking tanks in and out of service.

WW5 – Cover basins to reduce freezing and aerosol or odor emissions

This practice reduces, or possibly eliminates, the likelihood of water surfaces freezing or emitting aerosols and odors. For tanks located in rooms where frequent air changes are required, the utility should cover basins to reduce the volume of fresh air required for the maintenance of good indoor air quality and dehumidification requirements.

See also	Not applicable
Primary area/process	This practice may be applied to any open-tank treatment process, including grit removal, comminution, clarification, aeration, post-aeration, gravity thickeners, aerobic digesters, biosolids holding tanks and disinfection tanks.
Productivity impact	Installation of covers would interrupt the use of a tank for a limited time during installation.
Economic benefit	Payback depends on the number and size of tanks and the size of the room where tanks are located. The payback period will increase with the amount of equipment needed to implement this practice.
Energy savings	Energy savings are not the primary benefit of this best practice. There may also be incremental savings due to a more controlled environment if aerosol emissions, odors and/or humidity become issues needing to be addressed.
Applications & limitations	This practice may be limited by weather conditions.
Practical notes	Many enclosure materials are available for basin covers. Information on these materials can be found on manufacturers' websites.
Other benefits	Covering a structure results in improved control of odor and aerosol emissions as well as control of surface freezing and temperature loss, both of which are important parameters for a utility to manage within their treatment process.
Stages of acceptance	Covering open tanks is a widely accepted practice throughout the industry.

WW6 – Reduce fresh water consumption through final effluent recycling

Reducing the consumption of potable water through the recycling and utilization of final effluent (FE) in process applications or washdown of tanks may save energy by reducing the volume of potable water treated and/or pumped. The FE system should include a pressure tank and pump-control system, where appropriate, and direct pumping or individual booster pumps where high-pressure water is specifically required such as a belt press. Additional applications are possible with an inline filter prior to each application.

See also	Not applicable
Primary area/process	This practice is typically applied in the recycle system for grit washing, tank washdown, gravity-belt thickener, belt press, belt-wash water, cooling water for a compressor, etc.
Productivity impact	This practice has no impacts on production other than minor interruptions during the installation of any required equipment.
Economic benefit	Payback periods for this best practice are typically two to three years and will vary with the volume of potable water used.
Energy savings	Savings may reach 50% of the total effluent recycle-system energy if the existing system does not use a pressure-tank system to regulate supply. Additional energy savings will result from the reduction in potable water used.
Applications & limitations	Application of this practice is limited by the quality of effluent available for recycling.
Practical notes	This best practice is usually implemented when the final effluent quality is so high its use will not hamper the function of pumps, hoses, and nozzles used in its distribution. The practice is also cost effective when large volumes of wash water are required such as for biosolids processing or facility washdown.
Other benefits	Other potential benefits associated with this measure include the reduction of well-water consumption, a reduction in the operation of booster pumps (where applicable), and possible elimination of the need for two water-distribution systems throughout the facility.
Stages of acceptance	The practice of reducing the volume of potable water used in the wastewater-treatment process is widely accepted throughout the industry.

WW7 – Optimize aeration system

The utility should assess the aeration system to determine if it is operating as energy efficiently as possible for the required level of treatment. This assessment should compare the present loading conditions and system performance in kWh per million gallons and other Key Performance Indicators with those of similar facilities. The utility should consider the potential benefits and costs of improvements such as fine bubble aeration, dissolved-oxygen control and variable airflow-rate blowers.

See also	WW1 – Operational flexibility WW8 – Fine-bubble aeration WW9 – Variable blower airflow rate WW10 – Dissolved oxygen control WW14 – Assess aeration system configuration
Primary area/process	This practice is primarily implemented in secondary-treatment process activated sludge, aerobic digestion, channel aeration and post-aeration systems.
Productivity impact	Modified aeration systems may result in different types of savings for other treatment-unit processes. For example, in biosolids processing, this practice may lead to a reduction in the polymer-dosage requirements for biosolids thickening and dewatering. This practice has also led to increased treatment capabilities at most facilities. In some locations, final effluent quality has improved.
Economic benefit	The payback period is generally three to seven years for retrofits and about one year for new construction.
Energy savings	Savings of 30 to 70% of total aeration-system energy consumption are typical.
Applications & limitations	This practice can be applied to all aerated-treatment systems.
Practical notes	This best practice should be implemented at all facilities with aeration opportunities unless there is an overwhelming reason to avoid it.
Other benefits	This practice often results in improvement in other unit-treatment processes and reduced maintenance at some facilities.
Stages of acceptance	Fine-bubble aeration methods are widely accepted, as are dissolved-oxygen monitoring and control systems and various methods of controlling the flow rate of air to the treatment process.

WW8 – Fine-bubble aeration

Utilities with activated-sludge treatment facilities should assess the feasibility of implementing fine-bubble aeration, which provides energy-efficient treatment of wastewater. Fine-bubble aeration can be installed in new systems or retrofitted into existing systems. The technology usually improves operations and increases the organic treatment capability of a facility. For optimum performance, the utility should combine this practice with dissolved-oxygen monitoring and control and a variable-capacity blower and should monitor blower pressure. A facility installing fine-bubble aeration should plan for periodic diffuser cleaning (in-place gas-cleaning system or scheduled drain and manual cleaning), as diffuser fouling influences system pressure, oxygen-transfer efficiency and energy efficiency. To this end, it is usual practice to periodically "bump" the diffusers to maintain proper pressure drop and maximize oxygen-transfer capability.

See also	WW7 – Optimize aeration system WW9 – Variable blower airflow rate WW10 – Dissolved oxygen control
Primary area/process	The primary application for this best practice will be on aeration tanks, aerobic digesters, channel aeration and post-aeration.
Productivity impact	Minor impact during installation
Economic benefit	Economic benefits vary between new facilities and retrofit applications. A new system may pay back in as little as one year while payback on a retrofit will vary depending on the inefficiency of the existing system and the amount of new equipment required.
Energy savings	Energy savings range from 20 to 75% of the aeration or aerobic-digestion unit's energy consumption.
Applications & limitations	This practice applies to all aeration systems. A limit exists for aerobic digestion; if the system operates at a solids concentration of 2.5% or greater, further review should first be done.
Practical notes	Fine-bubble technologies have applications for all sizes of wastewater-treatment facilities. The percentage range of energy savings will be similar regardless of facility size. Fine bubble can replace mechanical aerators, but the facility should consider the ability to maintain proper mixing when assessing this modification.
Other benefits	Most sites who have implemented this practice report improved biosolids management, reduced polymer usage, better clarification and better overall effluent quality.
Stages of acceptance	This technology has gained a high level of acceptance in the industry.

WW9 – Variable blower airflow rate

The utility should require the aeration system and aerobic-digester blowers have variable air-supply rate capability such as multistage or single-stage centrifugal blowers with VFD, positive displacement blowers with VFD, inlet guide-controlled single-stage centrifugal blowers, and/or turbo blower with a VFD. The range of variability should respond to the specific requirements a site needs to precisely match system demands. The blower system should be able to supply either the minimum airflow required to meet existing low-load conditions, or the minimal airflow rate to meet mixing conditions of the aeration system and to meet the high loads of design conditions. The utility should avoid airflow discharge throttling and unnecessary backpressure, assess the application properly to ensure the correct delivery pressure and avoid delivery at a pressure higher than the process requires.

See also	G18 – Variable frequency drive applications WW7 – Optimize aeration system WW8 – Fine-bubble aeration WW10 – Dissolved oxygen control
Primary area/process	This practice applies to all aeration systems, including aerated grit, activated-sludge aeration tanks, aerobic-digestion systems, channel aeration and post-aeration systems.
Productivity impact	Interruption in production should occur only during installation.
Economic benefit	Payback is usually under three years.
Energy savings	Energy savings depend on site conditions and which parameter, mixing or organic loading, dictates the lesser amount of airflow required by the system. Savings will range from 15 to 50% of the energy consumed by this process.
Applications & limitations	This practice can be applied wherever blowers are installed.
Practical notes	Variable airflow-rate blowers should be integrated with fine-bubble aeration as well as dissolved-oxygen monitoring and control for optimum energy efficiency. The utility should consider the potential advantages of staging loads and replacing two blowers with three, four or five smaller units able to meet both current and future demands.
Other benefits	When teamed with fine-bubble diffusers and dissolved oxygen control technologies, effluent quality and biosolids processing are usually improved.
Stages of acceptance	Technologies for varying airflow rates are well received. Variable-speed positive-displacement blower arrangements and variable-capacity centrifugal blowers are becoming more available, and numerous installations now exist.

WW10 – Dissolved oxygen control

Automatic dissolved oxygen (DO) control technology will monitor and maintain the DO concentration level of the aeration tank(s) and post-aeration systems at a preset control point by varying the airflow rate delivered to the aeration system.

See also	WW1 – Operational flexibility WW7 – Optimize aeration system WW8 – Fine-bubble aeration WW9 – Variable blower airflow rate
Primary area/process	The primary applications of this practice are on aeration tanks at activated sludge facilities and aerobic digestion and post-aeration systems.
Productivity impact	Installation of most systems can be accomplished without interfering with normal operation.
Economic benefit	Paybacks for utilizing DO control technology are usually two to three years.
Energy savings	Savings vary depending on the efficiency of the present system. Generally, energy savings for an aeration system range from 20 to 50%.
Applications & limitations	Limitations will vary with the characteristics of the waste being treated. If the waste has characteristics able to easily foul a DO probe, the DO system will not be readily feasible. Maintenance of the DO probe to preserve its monitoring capability is the key to achieving maximum energy efficiency.
Practical notes	This control strategy should be employed at post-aeration systems and wherever activated sludge is used as the secondary-treatment process. Variable flow may be provided using variable frequency drives. Self-cleaning monitoring probes may reduce maintenance frequency and maintain energy-efficient operation for extended periods of time.
Other benefits	A DO-controlled system can improve the dewatering characteristics of waste biosolids and will have fewer problems treating a fluctuating influent load, compared to systems without DO-control technology.
Stages of acceptance	DO control is a well-established control methodology. The primary factor affecting acceptance is the concern about the reliability and potential maintenance costs related to DO probes.

WW11 – Cascade aeration

The utility should consider the installation of a cascade-aeration system for post-aeration applications. If the topography is favorable, this technology provides re-aeration of the effluent by increasing the water turbulence as it flows over the steps without a need for electricity.

See also	Not applicable
Primary area/process	This practice applies to the post-aeration of a wastewater treatment facility's effluent.
Productivity impact	Installation of a cascade aeration system can be accomplished without interfering with normal operation.
Economic benefit	The payback for this practice varies depending on the existing post-aeration system used.
Energy savings	If cascade aeration is used to replace an existing post-aeration system with either a subsurface-diffuser system and blowers or a surface-aeration arrangement, the utility can save 100% of the replaced system's electricity consumption.
Applications & limitations	The application of this best practice is site specific. About 10 to 15 feet of head (elevation differential) is needed between the final effluent point of discharge and the elevation of the receiving body of water, due to the low oxygen-transfer rate and the temperature dependency of oxygen transfer.
Practical notes	This process is only applicable at facilities with the appropriate topographical conditions.
Other benefits	None
Stages of acceptance	Cascade aeration for effluent re-aeration is a well-established method.

WW12 – Aerobic digestion options

The utility should assess the operation of its aerobic digester to determine if better control of airflow could be achieved through either using a separate smaller blower and/or using flexible membrane fine-bubble diffusers and equipment with adjustable airflow rates. Many facilities operate aerobic digesters with surface aerators or coarse-bubble diffusers with limited ability to modify or control the amount of airflow delivered to the process.

First, the facility should consider flexible membrane fine-bubble diffusers, which allow for variable airflow rates in digester applications. Second, the facility should choose equipment and/or controls with adjustable airflow rates. Often, air for the digestion process is bled from the activated-sludge blowers within the secondary-treatment process, allowing little or no control over the airflow delivered.

See also	WW7 – Optimize aeration system WW8 – Fine-bubble aeration WW9 – Variable blower airflow rate WW10 – Dissolved oxygen control WW18 – Digestion options WW19 – Mixing options in aerobic digesters
Primary area/process	This practice applies to biosolids treatment and management.
Productivity impact	Conversion to flexible-membrane fine-bubble diffuser technology and a smaller blower may improve the process of reducing volatile solids.
Economic benefit	Payback for this practice varies with the modifications required.
Energy savings	The application of flexible-membrane fine-bubble diffusers and a separate smaller blower in an aerobic-digestion system can reduce energy consumption for the process by 20 to 50%.
Applications & limitations	The key limitation to this practice is the final concentration of total suspended solids (TSS) in the aerobic digester. Operators may wish to be directly involved in the control of the concentration of TSS to maintain applicability of flexible-membrane fine-bubble diffusers. Mixing can also be a limitation.
Practical notes	This best practice is applicable to most systems but will typically require the diffusers and blowers be replaced. Some piping modifications may also be required.
Other benefits	Application of this practice can yield the following benefits: • Improved biosolids dewatering. • Reduced polymer demand when the digested biosolids are thickened or dewatered. • Less pin floc in the biosolids processing. • Improved reduction of volatile solids. • Improved decanting from the digester. • Reduced volume of biosolids for disposal.
Stages of acceptance	This technology is readily available and widely accepted, except in situations where the solids concentration within the aerobic digester exceeds 2.5% TSS.

WW13 – Blower technology options

Blower technology is continually evolving, providing more energy-efficient options to select from. This evolution in blowers needs to be continually researched and monitored by the utility to identify the most energy-efficient technology for the application being assessed. Current research and development and improved controls have brought turbo blowers and new technology screw blowers to wastewater-treatment facilities. This technology, along with single-stage variable vane blowers, provides options to the designers of wastewater-treatment facilities. The value of this evolving technology is blowers are increasingly energy efficient and can now operate more efficiently over a wider range of airflow rates. Utilities should research, assess and utilize the most current energy-efficient blower technology available for a specific application to ensure an energy-efficient selection from startup through design and able to be integrated with other elements to make the entire facility energy efficient.

See also	WW7 – Optimize aeration system WW8 – Fine-bubble aeration WW9 – Variable blower airflow rate WW10 – Dissolved oxygen control
Primary area/process	This best practice applies to all aeration applications, including aerated grit, activated-sludge aeration tanks, aerobic-digestion tanks, post-aeration tanks, aerated channels and air-assisted final filter backwash applications.
Productivity impact	The only interruption in treatment would occur during installation.
Economic benefit	Economic benefits of this practice vary between new facilities and retrofit applications. Payback on a new application may be as short as a year while payback on a retrofit application will depend on the inefficiency of the existing
Energy savings	Energy savings will depend on the specifics of the opportunity but generally range from 15 to 25% based on improved blower energy efficiency.
Applications & limitations	This best practice should be applied wherever blowers are installed. If applying turbo or centrifugal blowers to variable submergence processes, such as SBRs or aerobic digesters, the control system must be able to maintain operation of the system within safe limits.
Practical notes	New technology blowers should be assessed for any existing or new design application. The new blowers are often more energy efficient and have an expanded operating range when compared to former technologies at the same airflow rate and pressure conditions. Because capital expense for new blowers may be high, the utility should also evaluate the cost effectiveness of adding VFDs to achieve variable capacity with existing blowers.
Other benefits	When new blowers are integrated with other energy-efficient modifications – such as fine-bubble diffusers and dissolved-oxygen control – effluent quality may be improved, and the facility may gain additional overall treatment capability.
Stages of acceptance	Application of new blower technology has gained an increasing level of acceptance.

WW14 – Assess aeration system configuration

The utility should review and assess the aeration system to determine if the aeration blowers are supplying airflow to one demand (aeration tanks) or multiple demands (aerated-grit chambers, aeration tanks, aerobic digesters, channel aeration, post-aeration, airlift pumps and mixing-distribution structures). If the blowers are providing air to more than a single demand, it is likely the aeration system is not energy efficient. The system is operating inefficiently because the blower is providing airflow to demands with different pressure requirements and periodic demands. The utility should assess the airflow and pressure requirements for each demand separately to identify the level of energy savings available if each demand is individually met by a blower for its specific requirements.

See also	WW1 – Operational flexibility WW8 – Fine-bubble aeration WW9 – Variable-blower airflow rate WW10 – Dissolved-oxygen control
Primary area/process	This practice primarily applies to secondary-treatment process activated sludge, aerobic digestion, channel aeration, structure mixing and post-aeration systems.
Productivity impact	Modified aeration systems can result in improved automatic process control. This occurs because the control system can react to a single input and adjust on a specific air main. In contrast, if there are multiple demands tapped into the same air main, adjusting the airflow to a single demand would modify the airflow to the other served demands on the same air main.
Economic benefit	The payback period for this practice is generally three to seven years for retrofits and about one year for new construction.
Energy savings	Savings of 20 to 40% of total aeration-system energy consumption are typical.
Applications & limitations	This best practice applies to all aerated-unit process treatment systems.
Practical notes	This best practice should be implemented at all facilities with aeration opportunities unless there is an overwhelming reason to avoid it.
Other benefits	This practice can result in improvement in other unit-treatment processes on-site and reduced maintenance at some facilities.
Stages of acceptance	The practice is beneficial because of the positive process results and reduction in energy use, but the primary obstacle to acceptance is the payback period, which varies depending on the individual facility.

WW15 – Improve solids capture in dissolved air flotation (DAF) system

The utility should optimize the air-to-solids ratio in a dissolved air flotation (DAF) system by adjusting the supply air and/or by feeding the highest possible solids content. Furthermore, the utility can reduce energy use by operating the DAF thickener continuously and adding polymers to the biosolids.

See also	Not applicable
Primary area/process	DAF thickeners are used in sludge thickening and dewatering processes.
Productivity impact	No impact
Economic benefit	DAF thickeners have high operating costs because they require a significant amount of energy for air pressurization. Payback for this practice will vary depending on the degree of optimization.
Energy savings	Energy consumption can be reduced by improving solids capture. The savings will depend on the application.
Applications & limitations	Continuous operation of the DAF thickener and the addition of polymers can increase the utility's O&M or labor costs.
Practical notes	The utility should compare the cost of the additional polymer with the avoided energy cost to determine if the polymer addition is worthwhile.
Other benefits	Improved solids capture will benefit other downstream biosolids-treatment processes (i.e. thickening and/or dewatering).
Stages of acceptance	This practice is widely accepted by the industry.

WW16 – Evaluate replacing centrifuge with screw press

The utility should consider replacing the biosolids dewatering centrifuge with a screw press.

See also	WW17 – Consider replacing centrifuge with gravity belt-thickener
Primary area/process	This practice affects biosolids thickening and dewatering processes.
Productivity impact	Minimal impact during installation
Economic benefit	Payback for this practice will depend on the size of the centrifuge being replaced.
Energy savings	This best practice has the potential for high energy savings, but savings will vary depending on the size of the centrifuge being replaced.
Applications & limitations	A centrifuge is a relatively large energy consumer. Replacing a centrifuge with a screw press reduces energy consumption. This reduction results from the simple slow-moving mechanical equipment using gravity drainage to dewater the biosolids. The primary disadvantages of a screw press include the potential for increased odor problems and the larger space requirements for equipment. Biosolids thickening improves energy efficiency in biosolids digestion, dewatering and disposal. The screw press produces a biosolids mass with a lower solid concentration than from a centrifuge. In selecting a biosolids-treatment method, the utility should compare the lifecycle costs of alternatives to identify the most cost-effective option.
Practical notes	When considering biosolids dewatering equipment, it is more efficient to select the smallest equipment able to satisfy the dewatering requirements and allow for continuous operation, than to install oversized equipment operating for only a few hours per day. This option can reduce energy consumption in two ways: First, any biosolids held in liquid form before dewatering will need to be agitated or aerated, processes which each require unnecessary energy consumption; second, smaller dewatering equipment will require smaller motors. Biosolids-cake storage and transportation requirements must be addressed prior to transitioning to 24-hour biosolids dewatering operations.
Other benefits	In addition to using less energy, the screw press has lower operation and maintenance costs than a centrifuge. Furthermore, a screw press can produce Class A biosolids if modified (by adding heat).
Stages of acceptance	Screw presses have been widely adopted for biosolids dewatering.

WW17 – Consider replacing centrifuge with gravity belt thickener

The utility should consider replacing the centrifuge with a gravity-belt thickener for improved biosolids thickening.

See also	WW16 – Evaluate replacing centrifuge with screw press
Primary area/process	This practice affects biosolids thickening and dewatering processes.
Productivity impact	Minimal impact during installation.
Economic benefit	Payback for this practice will depend on the scale of the application.
Energy savings	This best practice has the potential for high energy savings, but savings will vary depending on the scale of the application.
Applications & limitations	A gravity-belt thickener consists of a gravity belt driven by a motor. As the sludge moves forward on the horizontally moving belt, water drains through the porous belt. The biosolids are continuously turned to improve the drainage process. Biosolids thickening reduces energy consumption in biosolids digestion, dewatering and disposal. In selecting a biosolids-treatment method, the utility should compare the lifecycle costs of alternatives in order to identify the most cost-effective option.
Practical notes	None
Other benefits	Other advantages associated with gravity-belt thickeners include smaller space requirements than other technologies and ease of automation and control.
Stages of acceptance	Gravity belt thickeners are a widely accepted option for biosolids thickening.

WW18 – Digestion options

When planning new facilities or the expansion of an existing facility, the utility should assess the energy and production impacts of various biosolids-processing options:

- Aerobic digestion: Standard aerobic digestion of biosolids is energy intensive compared to fine-bubble diffusion with dissolved-oxygen control and a variable airflow rate blower. Some facilities currently turn off the airflow to the digester over extended periods of time, further reducing energy consumption.
- Anaerobic digestion: Anaerobic digestion requires detailed assessment by the utility to determine if this is a viable option. While the capital cost of an anaerobic-digestion system is considerably greater than an aerobic system, an anaerobic system will consume less energy and has the potential to produce biogas for energy production over the lifetime of the system to help offset the initial capital costs.

The utility should consider both systems. If the plant treats over 5 MGD, anaerobic digestion is normally optimal; for plants treating less than 1 MGD, aerobic digestion can be optimal. In either case, all options should be considered.

See also	WW12 – Aerobic digestion options WW23 – Sidestream deammonification WW24 – Biotower energy efficiency
Primary area/process	This practice applies to biosolids treatment and management.
Productivity impact	For each process, the utility should assess the energy impacts of recycling supernatant to evaluate their impacts on the treatment process.
Economic benefit	Payback will vary considerably from facility to facility and should be determined on a system-specific basis.
Energy savings	The utility should consider both aerobic and anaerobic systems to determine the most energy-efficient option. Savings will vary considerably from facility to facility.
Applications & limitations	Each facility must decide the class of biosolids it wants to produce, which will determine the type of biosolids treatment required. The utility must address whether the waste being treated is a high organic (BOD) concentration, irrespective of hydraulic flow, which may require the application of anaerobic treatment to economically reduce the waste strength.
Practical notes	Operators should include all facility-specific parameters in assessing treatment options, particularly the amount of energy consumed and produced by each process.
Other benefits	Both aerobic and anaerobic digestion systems will affect the characteristics of the solids product, which can affect the solids-production rate and improve the facility's thickening and dewatering capabilities.
Stages of acceptance	Both aerobic and anaerobic biosolids digestion are readily available and widely accepted treatment processes.

WW19 – Mixing options in aerobic digesters

Biosolids mixing is an energy-intensive task should be assessed alongside aerobic-digestion considerations. Mixing is generally provided by aeration, mechanical mixing, pumping or a combination of these methods. Aeration of the biosolids mass is required to reduce volatile solids and control odor, but aeration may not be the most energy-efficient option for providing complete mixing in a digester, especially if constant oxygen is not required.

The utility should evaluate the energy costs of available options to determine the most energy-efficient technology appropriate for the facility's operations. A combination of mixing methods will permit the system to be completely turned off periodically may be the most practical and energy-efficient option.

See also	WW12 – Aerobic digestion options
Primary area/process	This practice applies to all aerobic-digestion systems.
Productivity impact	Minimal impact during installation and startup.
Economic benefit	The payback period for a retrofit condition will typically range from one to three years. Payback for a new installation may take only one year.
Energy savings	The potential energy savings will vary by application but can be as high as 50%.
Applications & limitations	The limiting factor of this practice is the solids concentration in the aerobic digester.
Practical notes	The solids concentration of the digester contents should be controlled to an approximate maximum total suspended solids concentration of 2.5%.
Other benefits	This practice also improves volatile solids reduction, resulting in a reduction of the volume of biosolids for disposal.
Stages of acceptance	Mixing technologies, including the combination of a mixing regime and an aeration methodology, is accepted by the wastewater industry.

WW20 – Mixing options in anaerobic digesters

The contents of an anaerobic digester must be mixed for proper operation, the destruction of volatile suspended solids and the production of biogas. Previously, mixing was generally accomplished by injecting biogas into the bottom of the digester and having it pass through the contents of the tank (like an airlift pump). Some facilities also constantly operate their circulation pumps and continually pump the contents of the tank to recirculate and mix the contents.

Present mechanical-mixing options such as jet mixing or linear-motion mixing are available to improve mixing, increase the level of volatile-solids destruction, increase biogas production and reduce energy consumption of the mixing process.

See also	WW24 – Biotower energy efficiency
Primary area/process	This best practice applies to the complete mixing of anaerobic digesters.
Productivity impact	Disruption in production should only occur during installation and when the biological environment evolves to make the anaerobic system function.
Economic benefit	Payback depends on whether the system is new construction or a retrofit of an existing system. The payback for a retrofitted system will take longer.
Energy savings	Energy savings will vary substantially depending on the specific facility conditions. The savings will also depend on the extent of modifications required to beneficially utilize the biogas produced.
Applications & limitations	Mixing should be employed by all anaerobic-digestion systems to maximize both volatile-solids destruction and biogas production while reducing the volume of biosolids for disposal.
Practical notes	The utility should evaluate the various technologies for mixing to identify the best option. It is important to assess the quality and production potential of the generated biogas and explore its beneficial use.
Other benefits	Maximizing the production of biogas may provide a lucrative and self-sustaining renewable energy opportunity.
Stages of acceptance	Various mixing technologies are widely accepted throughout the industry.

WW21 – Recover heat from wastewater

The utility should assess the possibility for waste-water heat recovery to provide a feasible and renewable energy source for heating and a heat sink for cooling applications. Heat recovery technology can be installed in new systems or retro-fitted into existing systems. The technology can be designed to improve the total energy balance of the wastewater system, and can also be paired with heat pumps for heating and cooling.

See also	Not applicable
Primary area/process	This best practice is primarily applied either when the raw wastewater enters the treatment facility or after final clarification. It can also be applied to higher- temperature discharges within the collection system. Heat can be removed and added at these points, and the temperature of the wastewater does not have a negative impact on the downstream process or collection system.
Productivity impact	Minimal impact during installation.
Economic benefit	The main economic benefits of this practice are energy-efficient heating and cooling. Payback times will vary depending on the extent and location of modifications required. A payback period of one to three years may be possible if only a heat exchanger is required.
Energy savings	Additional energy savings may be available through the inclusion of heat pumps in the system modifications. Including heat pumps may increase efficiency by 20 to 30%.
Applications & limitations	Outflow from the heat-exchanger component of the system must occur by gravity.
Practical notes	Heat exchangers come in six standard sizes ranging from 50 to 250 kW (~850.000 BTU) for heating and from 50 to 500 kW (~140 RT) for cooling. Each opportunity must be assessed on its merits and site-specific conditions. The heat exchanger should be equipped with a fully automated, mechanical self-cleaning system for minimal maintenance and maximum operational safety. For optimal maintainability, the system can include a bypass.
Other benefits	Application of this best practice provides the additional benefit of cooling down hot wastewater streams hard to treat biologically at higher temperatures.
Stages of acceptance	The technology is well proven with several installations worldwide, but the opportunity is still unrealized by many.

WW22 – Anoxic zone mixing options

When it becomes necessary for a wastewater-treatment facility to incorporate anoxic zones, the utility should determine the best technology and methodology. Many wastewater-treatment facilities use their existing aeration-system blower to mix their anoxic zones. While this method of mixing does work, other methods should be considered. For example, fractional-to-low-horsepower mechanical agitators can be used to mix the anoxic zones and usually have notably lower energy demands than utilizing the aeration-system blower. Mechanical mixing will better manage the concentration of oxygen in the zone because it generally does not incorporate air into the contents being mixed. In addition, avoiding use of the existing aeration system for anoxic-zone mixing enables more effective control.

See also	Not applicable
Primary area/process	This practice applies primarily to mixing treatment tanks to remain anoxic.
Productivity impact	Interruption to operations should only occur during installation of the equipment and associated controls.
Economic benefit	Simple payback is usually in the three- to five-year range depending on the size of the anoxic zone(s) to be mixed.
Energy savings	Overall savings will vary depending on the efficiency and size of the existing system to be retrofitted. Generally, the reduction in energy for the anoxic-mixing system ranges from 25 to 50 percent.
Applications & limitations	Limitations will vary with the characteristics of the material being mixed. In general, the higher the concentration of solids being mixed, the greater the savings.
Practical notes	Mechanical mixing should be assessed to account for the level of mixing required for improved process control. The goal of mechanical mixing is to be void of oxygen (anoxic), not anaerobic. It is better to have mechanical mixing because stirring the liquid keeps the solids in suspension. However, many wastewater facilities use their aeration system to mix the anoxic tank. By doing so, air (20% oxygen) is fed into the contents of the tank, making process control more challenging.
Other benefits	This practice reduces airflow rate required from a blower. In addition, if the air was previously provided by the aeration blower, this practice results in one fewer variable for a DO control system to account for in the aeration tank and thereby improves the efficiency of the overall treatment system.
Stages of acceptance	Anoxic zones are becoming more prevalent at wastewater-treatment facilities as nutrient-removal limits are being required. As a result, assessing mixing options is an acceptable practice.

WW23 – Sidestream deammonification

For facilities including nutrient removal and/or anaerobic digestion, the utility should assess deammonification to determine if it is a viable option for treating sidestream wastewater.

The process combines the partial nitration and deammonification processes using Anammox bacteria and is mainly used in treating ammonia-laden return streams generated from the dewatering of anaerobically digested sludge. The technology can also be applied in treating streams involving thermal-hydrolysis processes, co-digestion, industrial effluents and landfill leachate.

Regardless of its source, to be a candidate for deammonification, a waste stream should have a low biodegradable chemical oxygen demand (COD) content relative to its ammonia-nitrogen content. The technology is a viable option if the influent has a total COD-to-ammonia ratio of 1.0 or less.

See also	Not applicable
Primary area/process	This practice applies to the treatment of sidestream wastewater from dewatering facilities using anaerobic digesters.
Productivity impact	The recycle streams at wastewater facilities can represent 15 to 40% of the total nitrogen load entering the secondary-treatment process. Treating the sidestream using deammonification can have a significant impact on the main stream by saving a considerable amount of the energy used facility-wide for aeration and reducing the carbon requirements for total nitrogen removal in the secondary process. The amount of energy savings and reduction in carbon requirements are dependent on the carbon-to-nitrogen ratio of the plant influent and final effluent requirements.
Economic benefit	Based on conventional activated sludge for nitrification and denitrification, the deammonification process can save 60% of the energy required, 100% of the carbon required for denitrification and 50% of the alkalinity required for nitrification. In addition, deammonification can reduce the overall sludge production of the facility as it eliminates the need for an external carbon source, which would otherwise generate sludge and require disposal.
Energy savings	This practice can result in savings of up to 60% of the energy required for standard nitrification.
Applications & limitations	Deammonification can be achieved with a single-reactor approach (also called single-stage deammonification, in which partial nitration and anaerobic-ammonia oxidation occur in the same reactor), or a two-reactor approach (also called two-stage deammonification, in which nitration is achieved in a preceding reactor followed by an anaerobic-ammonia oxidation reactor). While both approaches have been successfully applied at full scale, industry understanding has developed in recent years to favor single-stage processes because of their simplicity and stability, as well as their ability to retain attractive volumetric efficiencies and easily retrofit into an existing basin. In facilities with anaerobic digestion, sidestream deammonification can be applied for the following specific purposes: • For high-rate wastewater treatment plants where reductions in plant effluent ammonia are desirable, it can reduce final effluent-ammonia loads while avoiding costly upgrades to the mainstream secondary process. • It can be used to enhance the plant's final effluent nitrogen and improve the stability of the biological phosphorus removal process by improving the carbon-to-nitrogen ratio of the mainstream influent. • The major limitations of deammonification are that it requires influent with a low carbon-to-nitrogen ratio and high temperature, and the startup can take as long as two to four months with seeding due to slow growth of Anammox bacteria.

Practical notes	This best practice should be implemented at all facilities with anaerobic digesters and total nitrogen limits.
Other benefits	Deammonification minimizes the impact of recycled-nitrogen streams entering the main plant by treating the sidestream.
Stages of acceptance	While the first installation is approximately 10 years old, the number of total installations worldwide is close to 100. Deammonification is increasingly gaining acceptance in the United States, with seven installations under construction or in operation and many more in the design or planning stage.

WW24 – Biotower energy efficiency

Biotowers (BTs) or trickling filters (TFs) are engineered systems able to provide cost-effective and energy-efficient treatment of municipal and industrial wastes. They can be designed for full treatment or as an initial (roughing) treatment for high-strength wastes. They are often teamed with activated-sludge systems to provide tertiary treatment and/or preliminary treatment to reduce the amount of organics entering the aeration tank. The availability of PVC media has provided designers with media with high compressive strength and identifiable void volumes so a BT/TF can now be designed for specific treatment requirements.

BTs/TFs require power for pumping the influent to be treated and may include a drive to control the rotational speed of the distribution arm. Furthermore, power is consumed to recycle flows, provide flushing and meet media-wetting rates. Both pumping rates and distribution-arm speed must be specified to indicate the most energy-efficient pumping range for operations. Variables range from minimum media-wetting rates to maximum media-flushing rates, with variable influent loadings optimizing flow according to wastewater organic characteristics. Assessing these variables and identifying the ideal balance should result in the most energy-efficient operation of a BT/TF system.

See also	G22 – Reduce pumping flow G23 – Reduce pumping head G24 – Avoid pump-discharge throttling
Primary area/process	This best practice should be applied to all BT/TF installations.
Productivity impact	This measure will impact operation during installation.
Economic benefit	The estimated payback will vary with the extent of the modifications. The payback will depend on the avoided lifecycle cost of energy versus the initial capital cost of the improvement.
Energy savings	Energy savings can vary greatly, with savings generally ranging from 15 to 30% of the present BT/TF energy consumption.
Applications & limitations	The application of this practice is usually limited to the BT/TF feed, recycle pumps and the value of installing a drive on the distribution arm.
Practical notes	A detailed evaluation of the system is necessary to determine which components should be changed to provide an acceptable level of energy-cost savings.
Other benefits	This practice results in reduced pump pressure and wear. Inclusion of a drive will provide better speed control of the distribution arm and will usually provide the opportunity to reduce pumping rates during operation, improving operational flexibility for the fixed media-treatment process.
Stages of acceptance	As the industry embraces energy-cost reduction opportunities, this best practice will become more acceptable.

WW25 – Optimize anaerobic digester performance

The utility should optimize anaerobic-digester performance and enhance biogas production. The primary ways to optimize anaerobic digestion are:

- Optimization of process temperature: Changing the digester operating temperature from mesophilic (85-105°F) to thermophilic (125-140°F) increases the rate of destruction of the volatile solids in the biosolids. Two-phased anaerobic digestion and temperature-phased digestion have shown potential benefits in volatile-solids reduction and biogas-production enhancement.
- Biosolids pretreatment: The hydrolysis step is often the limiting factor in anaerobic digestion. Hydrolysis can be improved by pretreatment to improve the ability of the active microorganisms to digest the biosolids. There are various pretreatment methods available, including chemical, physical and biological methods. Three of the most promising methods include thermal treatment, ultrasonic treatment and enzyme dosing.
- Co-digestion of auxiliary feedstock: It is often beneficial to co-digest biosolids with other types of organic waste such as restaurant grease, dairy/cheese wastes, vegetable/fruit waste and municipal organic waste. By doing so, the nutrient and moisture content can be optimized, process stability can be improved and biogas production can be enhanced.
- Pre-thickening of the biosolids: The utility can pre-thicken biosolids being fed to the digester to reduce excess water. This will increase the residence time of volatile solids and lessen the amount of energy required to heat the biosolids fed to the digester.

See also	WW26 – Use biogas to produce combined heat and power (CHP)
Primary area/process	This practice affects anaerobic-sludge digestion.
Productivity impact	Minimal impact during installation.
Economic benefit	The economic benefit of increased biogas production will be reduced by the cost of biosolids pretreatment and biogas-conditioning equipment necessary for biogas utilization. Acceptance of other waste may generate additional revenue for the wastewater-treatment facility.
Energy savings	Energy savings will be proportional to the amount of additional biogas produced for power and/or heat generation.
Applications & limitations	Except for the capital costs of the biosolids pretreatment and the biogas-conditioning equipment, this practice has no limitations.
Practical notes	Performance optimization of the anaerobic digester will benefit biosolids quality for downstream-biosolids processing, treatment and disposal.
Other benefits	Not applicable
Stages of acceptance	These optimization techniques are currently not widely used but are gaining industry interest.

WW26 – Use biogas to produce combined heat and power (CHP)

Biogas produced by an anaerobic digester can drive reciprocating engines, which can be directly connected to a pump, blower or electric generator, or can fuel micro-turbines, turbines or fuel cells to generate electricity. In addition, the thermal energy generated by these systems can often be captured and utilized to meet digester-heat loads and, where applicable, for building heating. Alternatively, the biogas can be used directly as boiler fuel to produce heat. In some limited applications, biogas is even being utilized as vehicle fuel.

See also	WW24 – Biotower energy efficiency
Primary area/process	This practice applies to anaerobic-sludge digestion.
Productivity impact	This practice has minimal impact during the installation of a CHP system.
Economic benefit	If sufficient biogas is available to fuel a CHP process able to generate electricity to operate the facility and capture heat to offset process needs, the facility may attain energy neutrality. Whether the system generates electricity or heat, or both, the internal use of the energy will offset energy-utility bills.
Energy savings	Utilities should assess biogas-to-electricity generating systems for treatment facilities with existing anaerobic digesters or are planning to install new ones. Each system needs to be individually assessed for feasibility.
Applications & limitations	The characteristics and quality of the biogas to be utilized must be assessed on a facility-by-facility basis to determine what level of biogas conditioning (cleanup) is required for the beneficial, reliable and non-harmful utilization in an engine, boiler or process to be fueled. The utility should also determine the volume of biogas generated to assess the need for incorporating auxiliary feedstock for the digester to make biogas production viable.
Practical notes	Reciprocating engines can be used in most facility sizes. Micro-turbines and fuel cells are available in smaller-capacity sizes for small facilities where emissions are a concern. Combustion turbines can be used for facilities with generating capacities shown to be greater than one megawatt. The utility should assess the potential to directly operate pumps or blowers using biogas to identify the most beneficial utilization option for the site.
Other benefits	Collecting and using biogas avoids venting and flaring, which release greenhouse gases. Beneficial utilization of biogas can also help a facility become self-sustaining.
Stages of acceptance	CHP systems are gaining acceptance and being increasingly implemented in the wastewater industry.

WW27 – Assessment of beneficial utilitization

Biogas is a renewable energy resource the utility should consider as a source of energy to fuel the facility's boilers, to directly fuel an engine to drive a piece of equipment, and/or to generate electricity. Analysis of an anaerobic-digestion system's biogas-production potential requires a different view – one looking to maximize energy production rather than minimize energy use as with other energy efficiency practices. The assessment should consider biogas production from initial operation through the end of its life cycle, helping utility personnel to understand the beneficial utilization over the system's lifetime.

Assuming the system loads grow over the lifetime of the equipment, initial loadings will be less than design conditions. Since the capital investment of the biogas-utilization system must be repaid over the design life, an analysis of the projected biogas generation must show the life cycle benefits outweigh the initial cost. An analysis showing how the anaerobic digester will be loaded over its lifetime should show how operation will be optimized on the overall system economics. Once the rate of biogas production has been estimated, the assessment should address options for the lifetime utilization of the biogas. A full analysis will also consider the quality of the biogas available and the potential need for special conditioning equipment. The type and size of gas conditioning equipment should be specified.

The presence of biogas production capable of meeting both the internal-electric needs of the facility and process-heating needs is not unusual. Biogas used for process heating has a conversion efficiency of 80 to 85%. Conversion to electricity can be done at a rate of 30 to 35%. If both heat and power are generated, the conversion efficiency will generally range from 70 to 75%.

See also	WW18 – Digestion options WW20 – Mixing options in anaerobic digesters WW24 – Biotower energy efficiency WW25 – Optimize anaerobic-digester performance
Primary area/process	This practice applies to anaerobic digestion.
Productivity impact	Minimal impact during installation.
Economic benefit	The economic benefit is in the opportunity to offset the facility's electric and natural-gas use through the utilization of an otherwise flared-off renewable energy resource.
Energy savings	The amount of energy savings will depend on the quantity and quality of the biogas and how much can be utilized. At some wastewater-treatment facilities, the utilization of internally generated biogas has been enough to eliminate facility's reliance on purchased energy.
Applications & limitations	The beneficial utilization of biogas should be implemented, when feasible, at all wastewater-treatment facilities with anaerobic digestion. Many biogas systems have failed due to the improper treatment of the impurities in the biogas, resulting in poor operation and system breakdown. Biogas utilization should always use gas-conditioning equipment.
Practical notes	Biogas utilization must incorporate biogas conditioning to ensure the system being fueled does not become impaired because of varying biogas characteristics.
Other benefits	The utilization of biogas can assist the facility in moving toward energy neutrality and help in reducing greenhouse-gas emissions (methane and carbon dioxide).
Stages of acceptance	The utilization of biogas is gaining acceptance and being implemented more frequently across the industry.

BUILDINGS BEST PRACTICES

Table of contents

Monitoring and controls		
B1	Monitor lighting operation	106
Maintenance		
B2	Clean lamps and fixtures	107
B3	Properly maintain outside air ventilation devices and ventilation supply fans	108
B4	Replace ventilation air filters	109
Measures		
B5	Install VFD control on air compressors	110
B6	Install high-efficiency lighting and advanced controls	111
B7	Evaluate existing HVAC systems for re-commissioning or replacement	112
Planning and design		
B8	Evaluate projects for potential LEED certification	113

Index

The following table shows the typical energy savings and payback periods for the Best Practices found in this section, grouped by category, and includes three blank columns for you to complete as you analyze each practice. You can utilize this checklist to track the process of reviewing these Best Practices and note which are feasible for your utility.

	BEST PRACTICES	TYPICAL ENERGY SAVINGS OF UNIT OF PROCESS (%)	TYPICAL PAYBACK YEARS	BEST PRACTICE FEASIBLE? (YES/NO)	DATE ANALYZED	FURTHER REVIEW NEEDED? (YES/NO)
Monitoring and controls						
B1	Monitor lighting operation	15 - 90	Variable			
Maintenance						
B2	Clean lamps and fixtures	Variable	Variable			
B3	Properly maintain outside air ventilation devices and ventilation supply fans	Variable	Variable			
B4	Replace ventilation air filters	Variable	Variable			
Measures						
B5	Install VFD control on air compressors	Variable	Variable			
B6	Install high-efficiency lighting and advanced controls	10 - 30	< 4			
B7	Evaluate existing HVAC systems for re-commissioning or replacement	Variable	Variable			
Planning and design						
B8	Evaluate projects for potential LEED certification	Variable	Variable			

B1 – Monitor lighting operation

Manually switching off lights is one of the best no-cost methods of saving lighting energy. Facility staff should be made aware of how to turn on and off lights and signage and instructed to turn lights off when daylight is sufficient or they are not needed. Occupancy sensors use various detection technologies to turn off lights in unoccupied areas and can potentially be installed in conference rooms, restrooms, storage areas and other spaces prone to intermittent occupancy with lighting left on.

See also	Not applicable
Primary area/process	This practice can be applied to lighting in areas with intermittent or low personnel usage.
Productivity impact	No impact.
Economic benefit	Occupancy sensors are relatively inexpensive, with installation costs typically ranging from $50 to $150 per sensor and can have a significant impact on energy savings.
Energy savings	Typical energy savings from occupancy sensors range from 15 to 90%, depending on type and use of space. For example, occupancy sensors integrated with bi-level fluorescent lighting can provide substantial energy savings in hallways, stairwells and storage areas.
Applications & limitations	This practice has limited application in high-traffic areas due to excess cycling of lighting fixtures, which can decrease fixture-life expectancy. In addition, the utility should bear in mind unilaterally installing occupancy sensors without understanding the use of the space can lead to spending unnecessary additional capital.
Practical notes	None
Other benefits	Not applicable
Stages of acceptance	This practice is widely accepted.

B2 – Clean lamps and fixtures

Facility lighting fixtures and lamps should be washed on a regular schedule using the proper cleaning solution to avoid the accumulation of dirt, which can result in a decrease of light output ranging from 5 to 50%. The frequency of cleaning required depends on the amount and type of dirt in the air, whether the fixture is of the ventilated or non-ventilated type and the location of the lighting fixture. Frequent cleaning may be required if the room is exposed to large amounts of dust and grease, if the lamps are directed upward without protection from falling dust or if the lighting is outside. Many luminaries initially provide the same illumination level, but its ability to be economically maintained and to preserve maximum effectiveness is dependent on quality and appropriateness. Selecting the appropriate fixtures for a specific location or application can reduce the need for cleaning or simplify the cleaning process, improving the longevity and overall effectiveness of the lighting.

See also	Not applicable
Primary area/process	This practice applies to all lighting at the facility.
Productivity impact	Cleaner fixtures provide better lighting output and brighter spaces, which can increase productivity.
Economic benefit	This practice can ensure the fixtures remain in service for the duration of its expected life, which can save capital funding for when full replacements are necessary.
Energy savings	None
Applications & limitations	Most normal maintenance procedures call for lamps and fixtures to be cleaned on an annual basis, but may be difficult to accomplish with limited staff.
Practical notes	None
Other benefits	Not applicable
Stages of acceptance	This practice is well accepted.

B3 – Properly maintain outside air ventilation devices and ventilation supply fans

The utility should regularly check outside air-ventilation devices as well as ventilation/supply fans and perform any routine maintenance the equipment requires.

Many ventilation systems use outside air economizer dampers automatically modulating the amount of outside airflow used to condition the space. These economizers allow up to 100% of outside air for free cooling during moderate outdoor conditions but restrict the outside airflow to a minimum setting when it is too cold or hot outside for beneficial use. Outside air dampers and economizer cycles can have reliability problems if the outside air damper becomes stuck open (in which case too much outside air may enter the system and the cooling coils can be overloaded) or stuck closed (in which case the facility may not get the proper air changes). The utility should regularly clean and lubricate the movable parts and periodically check the actuator movement to ensure proper operation and maintain maximum system efficiency.

Additionally, ventilation/supply fans require routine maintenance for optimal operation. It is necessary to lubricate bearings, adjust or change fan belts, and clean fan blades on an annual basis to maximize fan efficiency.

See also	Not applicable
Primary area/process	This process applies to any outside air ventilation devices at a facility.
Productivity impact	No impact
Economic benefit	This practice can have significant impact on equipment function and provide simple, cost-effective energy savings.
Energy savings	This practice can provide significant energy savings.
Applications & limitations	The main purpose of a ventilation system in a wastewater treatment plant is to supply enough outside ventilation air for the dilution of odor-causing contaminants such as hydrogen sulfide and ammonia. The discharge from the ventilation system is typically treated by vapor-phase systems, including wet-air scrubbing and carbon adsorption. If large amounts of air are ventilated, vapor-phase systems can also be effective at providing adequate ventilation for occupancy. The ventilation system also plays an important role in conditioning the interior space.
Practical notes	None
Other benefits	Not applicable
Stages of acceptance	This process is well accepted.

B4 – Replace ventilation air filters

The utility should replace old or outdated filters in the facility's ventilation system in order to improve the system's energy efficiency.

The ventilation system removes particulates contained in outside air by way of air filters. Particulate accumulation on air filters reduces airflow and increases fan-energy consumption. The use of modern air filters improves indoor air quality while reducing the total cost of operation if the system is using VFD technology. The cost of the filter is relatively inexpensive compared to the cost of the fan energy required to push the air through the dirty filter. The energy-cost savings can be significant to justify the cost to upgrade to a new filter. The most common improvement is to replace two-inch pleated filters with four-inch extended-service pleated filters.

See also	Not applicable
Primary area/process	This practice can be applied to any building at the utility utilizing a ventilation system.
Productivity impact	No impact
Economic benefit	Replacing old air filters increases airflow while reducing the fan-energy consumption, which reduces energy cost.
Energy savings	Energy savings for this practice can be significant if filters are old and not allowing air through.
Applications & limitations	No limitations
Practical notes	None
Other benefits	In addition to saving energy, replacing old filters will also improve air quality at the facility.
Stages of acceptance	This practice is widely accepted.

B5 – Install VFD control on air compressors

Compressors produce low volumes of air at 80 to 140 psi. Many utilities have rotary-screw-type air compressors using inlet modulation with unloading for part-load control. In this setup, the air compressor produces compressed air until a desired value is reached, at which point it begins modulating and then unloads. When it unloads, the air compressor continues rotating until the maximum pressure value is reached. This mode is highly inefficient because it still requires about 20% of the compressor's full electrical load. To save energy, especially in part-load operation, the utility should consider installing VFDs on a rotary-screw air compressor in place of inlet modulation with unloading.

See also	G18 – Variable frequency drive applications
Primary area/process	This practice affects any component of the treatment process including air compressors, which are commonly used to provide air to pneumatic actuators and operate air-diaphragm pumps.
Productivity impact	VFD-controlled air compressors provide air at a more constant pressure, which can increase productivity.
Economic benefit	Payback for this best practice depends on the operating hours and size of the compressor.
Energy savings	Energy savings for this best practice depend on the operating hours and size of the compressor.
Applications & limitations	No limitations
Practical notes	None
Other benefits	None
Stages of acceptance	The use of VFDs on air compressors is widely accepted by the industry.

B6 – Install high-efficiency lighting and advanced controls

Utilities should assess opportunities for installing high-efficiency lamps and advanced lighting controls to increase energy efficiency in individual fixtures as well as the overall lighting system.

Options include:

- Energy-efficient lamps/fixtures: The primary replacement option is the light emitting diode (LED). The quality, reliability and cost of this type of lighting make it a viable alternative to incandescent, high-intensity discharge and T-12 fluorescent fixtures/lamps. However, in many cases, a more suitable option may be energy-efficient fluorescent lighting with high-efficiency ballasts. Compact fluorescent lighting is included in this category. Several of these options include technologies able to work for outside and severe-condition environments.
- Advanced lighting controls: These include multilevel lighting controlled by motion, ambient-daylight, timers or a combination of these elements. Advanced lighting controls can improve the overall efficiency of the lighting system and should be considered in all lighting retrofit and new-construction projects.

See also	Not applicable
Primary area/process	This practice should be assessed for potential application in all buildings across the utility, including office spaces, hallways, treatment facilities and parking lots.
Productivity impact	Lighting quality can have significant positive impacts on productivity due to increased visibility for employees.
Economic benefit	Payback for this practice depends on the number and type of lights and controls being installed/replaced and is typically less than four years. With increasing product lifetimes and lower initial costs, LED projects are becoming more viable.
Energy savings	Energy savings depend on the number and type of lights being replaced, but typical lighting projects can reduce the electrical-lighting energy needed by 30% or more. Efficiency improvement approaching 70% has been documented in the case of LED lighting with advanced controls. The long operating hours of exterior fixtures can yield significant energy savings and low paybacks.
Applications & limitations	Lighting intensity levels should be maintained or increased, depending on needs. Compliance with all electric-code requirements should be fulfilled regarding fixture type, location and the ambient conditions of the fixture location. When selecting replacement lighting, choose fixtures with the ENERGY STAR® label or qualified by the Consortium for Energy Efficiency or DesignLights Consortium. These qualifications are meant to denote reputable and high-quality products. They are also a frequent requirement in utility or municipal rebate programs.
Practical notes	Lighting projects usually have a short, simple payback period and can often be used to help finance additional energy work.
Other benefits	Not applicable
Stages of acceptance	The installation of high-efficiency lighting fixtures and controls is generally accepted.

B7 – Evaluate existing HVAC systems for re-commissioning or replacement

Most buildings associated with water and wastewater treatment require some type of heating, ventilation and air-conditioning (HVAC) system. These systems can add to the inefficiency of the overall facility, and the utility should regularly inspect its HVAC system to determine if the equipment needs to be either re-commissioned or considered for replacement with more energy-efficient units.

Re-commissioning consists of an overall evaluation and adjustment of the system to ensure it is operating properly and to design conditions. Depending on the configuration of the building and existing HVAC system, there are several options for replacement. Variable-refrigerant-flow split systems are very energy efficient under part-load conditions, as they deliver air conditioning to different areas within a building based on an actual cooling requirement. Other options include energy-efficient unitary or rooftop units. Even window units should be evaluated for replacement with ENERGY STAR – rated equivalent units.

See also	Not applicable
Primary area/process	This practice can be applied at all facilities requiring HVAC.
Productivity impact	Properly sized and selected HVAC systems operating as designed can provide a more energy-efficient and comfortable working environment, which tends to increase productivity.
Economic benefit	Having a properly designed and operated HVAC system can provide savings in operational, maintenance and utility costs. Simple payback will depend on the size and condition of the existing system. On average, paybacks for HVAC system replacement projects are usually between four to eight years.
Energy savings	Energy savings will vary based on current condition and type of the existing HVAC system. Re-commissioning can provide energy savings of 10 to 20%.
Applications & limitations	None
Practical notes	HVAC systems should be properly maintained throughout the life of the unit to ensure optimal performance and efficiency.
Other benefits	Not applicable
Stages of acceptance	This practice is widely accepted.

B8 – Evaluate projects for potential LEED certification

Utilities should consider the standards set forth by the Leadership in Energy and Environmental Design (LEED) Green Building Rating System in the design of any new construction or major renovation projects and should apply for LEED certification when appropriate.

The LEED Green Building Rating System is a voluntary, consensus-based national rating system for developing high-performance, sustainable buildings. LEED addresses all building types and emphasizes state-of-the-art strategies in five areas: sustainable site development, water savings, energy efficiency, materials and resources selection, and indoor environmental quality. Projects typically will need to involve energy efficiency measures in order to qualify for LEED certifications. Whether for new construction or major renovation, LEED certification should be considered as a possible alternative to standard design.

See also	Not applicable
Primary area/process	This practice affects all areas of building construction, location and energy use. LEED is a comprehensive energy approach and uses many measures and standards from the American Society of Heating, Refrigerating and Air-Conditioning Engineers and other code sources within its best practices.
Productivity impact	No impact
Economic benefit	The economic benefit of this practice is proportional to the energy savings achieved.
Energy Savings	Recent studies have found on average, LEED-certified buildings are more energy efficient than standard-design buildings. The level of energy efficiency (and thus the amount of savings) varies depending on location, orientation and other factors, so due diligence is required by engineers and consultants when deciding to apply.
Applications & limitations	The utility should assess any planned projects to determine whether applying for LEED certification is appropriate and valuable.
Practical notes	None
Other benefits	Not applicable
Stages of acceptance	LEED certification is starting to receive wide levels of acceptance.

APPENDICES

Appendices

Appendix A

Baseline energy use and Key Performance Indicators (KPI) 116

Appendix B

Understanding your electric bill 120

Appendix C

Economic-evaluation process 125

Appendix D

Small-utility energy management checklists 129

Appendix E

Additional resources 144

Appendix A

Baseline energy use and Key Performance Indicators (KPI)

An effective Energy Management Team will emphasize the use of system data to make decisions regarding capital investments and operational changes. This method provides a model and procedure for any utility to collect, develop and analyze this critical data.

Select key performance indicators

By itself, saving energy is a benefit because it reduces operational costs. However, as a business you are responsible for performing a key task for the community such as treating water to make it safe and drinkable or treating wastewater to make the effluent safe for the environment. Therefore, energy savings must be indexed against the production of the core business-production units such as millions of gallons per day (MG) or pounds of biological oxygen demand (BOD) reduced, e.g. kWh/MG or kWh/lb BOD.

A Key Performance Indicator (KPI), known also as an Energy Performance Indicator, shows how your energy use changes as you change equipment and modify operational procedures. The data collected and analyzed at any given time represents a snapshot of energy performance.

The following discussion shows how you can develop your facility's baseline and use it as a tool to track your KPI and compare it with your selected benchmarks and goals.

Baseline development

The following pages are tables sequenced according to the tasks you should perform in developing your current energy use as a function of your production. The tables for Steps 2 through 4 are populated with sample data to give you an idea of how this is done.

Step 1 Data collection template

The first table is a blank sheet help you plan your data-collection efforts. It identifies what data you need to collect so you can organize next steps. You may want to add lines for additional equipment.

Data collection template

	# UNITS	HP OF UNIT	KW OF UNIT	# UNITS IN OPERATION	HRS/YR IN OPERATION	ESTIMATED ENERGY USE (KWH/YR)	% OF TOTAL
Raw Wastewater Pumps							
Fine Screens							
Fine Screen Conveyor							
Grit Removal							
Grit Pumps							
Primary Settling Basins							
Primary Sludge Pumps							
Aeration Blowers – PD							
Aeration Blowers – Centrifugal							
Secondary Settling							
Return Activated Sludge Pumps							
Waste Activated Sludge Pumps							
Disinfection System							
Final Effluent Peak Pumps							
Primary Sludge Thickening							
Anaerobic Digester Circulation Pumps							
Anaerobic Digester Mixing							
Belt Press							
Odor Control							
Effluent Reuse Pumps							
Sludge Transfer Pumps							
WWTF Compressed Air System							

Step 2 Gather unit ratings

Once your data-collection plan is ready, begin collecting the data. Record nameplate data for key equipment you want to include. Under the horsepower or kW ratings, you should indicate the loadings if not fully loaded since motors are often partially loaded and, in those cases, using the full rating would not reflect actual energy use.

Step 3 Gather operations data

You should also collect operations data, including hours of operation (per day, week or year). It may be necessary to estimate the hours based on knowledge of equipment operation.

Step 4 Calculate energy use

The final two columns of the table allow you to calculate the estimated annual energy use for the equipment. This value represents the baseline for a particular piece of equipment. After you've gathered all of the equipment data, you can calculate the percent of the total energy load for each piece of equipment.

Complete energy use

	# UNITS	HP OF UNIT	KW OF UNIT	# UNITS IN OPERATION	HRS/YR IN OPERATION	ESTIMATED ENERGY USE (KWH/YR)	% OF TOTAL
Raw Wastewater Pumps	3	200	149.2	1.5	8,760	1,960,488	15.10%
Fine Screens	3	1.5	1.1	2	2,190	4,818	0.04%
Fine Screen Conveyor	1	1.5	1.1	1	2,190	2,409	0.02%
Grit Removal	2	2	1.5	2	8,760	26,280	0.20%
Grit Pumps	2	10	7.5	2	2,190	32,850	0.25%
Primary Settling Basins	4	2	1.5	4	8,760	52,560	0.40%
Primary Sludge Pumps	2	20	14.9	4	2,190	130,524	1.00%
Aeration Blowers – PD	4	250	186.5	1	8,760	1,633,740	12.58%
Aeration Blowers – Centrifugal	4	300	223.8	3	8,760	5,881,464	45.29%
Secondary Settling	4	2	1.5	4	8,760	52,560	0.40%
Return Activated Sludge Pumps	4	50	37.3	4	8,760	1,306,992	10.06%
Waste Activated Sludge Pumps	3	10	7.5	2	2,190	32,850	0.25%
Disinfection System	1		130	1	4,380	569,400	4.38%
Final Effluent Peak Pumps	4	100	74.6	1	350	26,110	0.20%
Primary Sludge Thickening	4	10	7.5	4	350	10,500	0.08%
Anaerobic Digester Circulation Pumps	4	15	11.2	4	8,760	392,448	3.02%
Anaerobic Digester Mixing	6	10	7.5	4	8,760	262,800	2.02%
Belt Press	1	0	7.5	1	2,920	21,900	0.17%
Odor Control	1	50	37.3	1	8,760	326,748	2.52%
Effluent Reuse Pumps	1	10	7.5	1	4,380	32,850	0.25%
Sludge Transfer Pumps	2	20	14.9	1	2,080	30,992	0.24%
WWTF Compressed Air System	2	30	22.4	1	8,760	196,224	1.51%
ENTIRE FACILITY ENERGY				TOTAL =		12,987,507	kWh/yr
				@10 MGD =		3,650	MG/yr
				BASELINE =		3,558	kWh/MG

* The 1.5 represents one pump operating continuously (8,760 hrs/yr) and a second pump operating during higher influent flow (daily diurnal flows and wet-weather conditions) for 4,380 hrs/yr or 0.5 equivalence.

At the bottom of the table is the total facility energy use. Coupled with your facility's production data, you can calculate your baseline. When you compare it with your annual utility bill, it will likely be less, due to unaccounted energy use such as computers, lighting and HVAC. Nonetheless, the estimated baseline gives you a solid indication of your process energy use.

You will now have the energy use (kWh) and percent of total facility energy use each component consumes. You can compare these values to general industry values to identify if any piece of equipment or process is using more energy than it should. You can then initiate action including a wire-to-water or wire-to-product analysis, to assess each piece of equipment or aggregate energy use to determine if opportunities exist.

Setting a Key Performance Indicator (KPI) goal

Whether you want to call it a benchmark or goal, your KPI goal is a target with a time limit. For example, a facility may want to save 5% of their annual energy consumption within one year. Another example may be to align your facility's operations with the appropriate industry benchmark within two years. The industry benchmarks in Section 1 are a good way to compare your facility's performance.

Once you've set your KPI goal, you can to measure the impacts of your capital and operational improvements, which enables you to translate these values into cost savings for your facility.

Appendix B

Understanding your electric bill

Get to know your bill

Included are two sample electric bills showing the information typically provided to help you better understand common terms and definitions.

Suggestions for managers and operators

1. Get a copy of your monthly bill and review it to understand the information it provides.
2. Contact and get to know the energy provider account representative for your facility.
3. Determine what rate schedule your energy provider has applied to your facility.
4. Meet with your account representative to assess if this rate schedule is the most appropriate one for your facility. Ask if they can provide online real-time monitoring of your energy use. Request a graph of your 15-minute demand values so you can see when peak demands occur.
5. Develop a delivery and review procedure where the facility is provided a copy of the bill and staff review it monthly.
6. Plot energy bill data graphically to help visualize trends in your facility's energy use.
7. Develop an energy monitoring program to track energy consumed by major process equipment. See this Energy Guidebook's Best Practices for information about energy use tracking and peak management.

Put power into the hands of operators and managers

By encouraging and, if feasible, requiring facility managers and operators to review and understand their electric bills, management of a water and wastewater utility can empower those who may have the best understanding of how to reduce energy and demand charges. Many low- and no-cost operational changes can be easily implemented to reduce electric costs.

Understanding what affects your bill is the first step in managing and reducing your energy costs. The following list provides definitions of the terms typically found on a bill.

Electric bill definitions

Total energy	all energy (kWh) used in billing period.
On-peak energy	all energy (kWh) used during peak hours (generally M-F 09:00 to 21:00*)
Adjusted on-peak demand	on-peak kW demand adjusted for power factor
Billable demand	highest kW demand during the last 12 months, also called customer demand
Billable on-peak demand	same as adjusted on-peak demand
Cooling degree days	how much higher than average the daily temperature is compared with a base of 65 degrees Fahrenheit. Subtract 65 degrees from the average daily temperature. The higher the cooling degree days, the more your air conditioning system needs to run.
Customer charge	monthly flat fee for administration, meter reading, billing, etc. Amount varies based on rate class (size and sophistication of service)
Customer demand	highest kW demand during last 12 months
Demand actual	highest kW demand during peak hours
Energy-charge credit kwh	all kWh in excess of 400 hours X on-peak billing demand****
Heating degree days	how much lower than average the daily temperature is compared with a base of 65 degrees Fahrenheit. The average daily temperature is subtracted from 65 degrees. The higher the Heating Degree days, the more your heating system needs to run.
Low-income assistance	a Wisconsin state-mandated fixed fee†
Off-peak demand	highest kW demand during the off-peak hours
Off-peak energy	all energy (kWh) used outside of peak hours
Off-peak kwh energy use charge	charge for energy used outside of peak hours
On-peak demand	highest peak kW demand during billing period
On-peak kw demand	highest kW demand during peak hours, also called actual demand
Peak kwh energy use charge	charge for energy used during peak hours (generally M-F 09:00 to 21:00)*
Processing charge	one-time charge for new account setup
Power-factor on-peak demand	calculated average power factor during peak hours***
Reactive energy	all kVars used during peak hours (used to calculate power factor)**
The number of calendar days	during the billing period (in this example: 30 days)
The number of workweek days	(M-F) during the billing period (in this example: 22 days)

*Note the on-peak time frame is established by your electric utility. Consult your electric-account manager to identify your on-peak time frame.

**Reactive energy – amount of kilo-vars (kVar) used in billing period. Reactive power is delivered from the generator source and used by equipment with core/coil assemblies to develop magnetic fields. Reactive power does not provide any mechanical work like real power (kW) does but still contributes to the amount of kVar or the "apparent power."

***Power factor is the ratio of real power to apparent power. The average on-peak power factor is defined to be the quotient obtained by dividing the on-peak kWh used during the month by the square root of the sum of the squares of the on-peak kWh used and the lagging reactive kilovolt-ampere-hours supplied during the same on-peak period. When the average on-peak power factor is less than 90%, the power factor adjustment for billing is 90% divided by the average on-peak power factor (expressed in percent).

****Not to exceed 50% of total kWh times $0.01/kWh. 400 hours based on a 30-day billing period.

†In 2006, the Wisconsin Legislature passed Act 141, which requires electric utilities to collect a fee from their customers to help fund low-income energy-assistance programs. These funds are collected through the WI Low-Income Assistance Fee – previously known as the Non-Taxable Customer Charge – and then transferred to the Wisconsin Department of Administration to assist low-income customers.

Understanding your bill – Example #1

Wisconsin Public Service Corporation

ACCOUNT NUMBER	DATE DUE	PLEASE PAY
[redacted]	08/13/2015	$2,219.53
6		AMOUNT PAID

[redacted]

WISCONSIN PUBLIC SERVICE
PO BOX 19003
GREEN BAY WI 54307-9003

[redacted]

Please fold on perforated line, detach and return this portion with your payment.

Wisconsin Public Service
PO BOX 19003
GREEN BAY WI 54307-9003

Visit us on the Web
www.wisconsinpublicservice.com

Call 877-444-0888
7 AM-5 PM Mon-Fri

CUSTOMER NAME AND ADDRESS	ACCOUNT	BILL DATE	NEXT READ
[redacted]	[redacted]	07/23/2015	08/24/2015

Conservation Information 06/24/2015 to 07/23/2015

	KWH USED	DAYS	KWH/DAY	HTG DEG DAYS (21)	KWH HTG DEG DAY	CLG DEG DAYS (22)	KWH CLG DEG DAY
This Year	24160	30	805.3	49	493.1	70	345.1
Last Month	22560	32	705.0	193	116.9	12	1880.0
Last Year	23360	31	753.5	56	417.1	73	320.0

Statement of Your Account

	Beginning Amount	.00
ELECTRIC	Energy Charges/Credits	1,165.98
	Monthly Charges	130.61
	System Demand Charges	794.58
	Customer Demand Charges	128.36
	Total Amount Due 08/13/2015	**$ 2,219.53**

Understanding your bill – Example #1

Wisconsin Public Service Corporation

Detailed Explanation

COMM IND TOU ELEC SEC
Cg-20

	Meter No. [redacted]	Reading 07/23/2015	4504
		Reading 06/23/2015	- 4202
			302
		Meter Constant	x 80 .00000
		KWH Used	24,160
	Energy Charges/Credits		
2	On Peak	7,760 KWH at $.06591	511.46
3	Off Peak	16,400 KWH at $.03991	654.52
		Total Energy Charges/Credits	1,165.98
13	Monthly Charges	Daily Cust Chg(30 Days at $3.0575)	91.73
		WI Low-Income Assistance Fee 19	8.87
		WI Low-Income Assistance Fee	30.01
		Total Monthly Charges	130.61
	System Demand		
14	Peak	60 KW x $13.243 (22 Days)	794.58
	Base	48 KW x $.00 (22 Days) 23	
	Standby Demand	0 KW x $2.251 (22 Days)	
		Total System Demand	794.58
17	Customer Demand	12 Month Maximum Demand	
		76 KW x $1.689 (30 Days) 24	128.36
		Total Customer Demand	128.36
		Total Electric Charges	**2,219.53**

STATEMENT SUMMARY FOR ACCOUNT [redacted]	
Previous Balance 06/23/2015	$1,939.78
Payment 07/20/2015	$1,939.78CR
Beginning Amount	$.00
Electric Service	$2,219.53
Total Amount Due 08/13/2015	**$2,219.53**

Understanding your bill – Example #2

Xcel Energy®

MAILING ADDRESS	ACCOUNT NUMBER		DUE DATE
[redacted]	[redacted]		09/21/2015
	STATEMENT NUMBER	STATEMENT DATE	AMOUNT DUE
	[redacted]	09/01/2015	$28,643.97

SERVICE ADDRESS: Primary Elec Svc LOAD PROFILE

NEXT READ DATE: [redacted]

ELECTRICITY SERVICE DETAILS

PREMISES NUMBER: [redacted]
INVOICE NUMBER:

METER READING INFORMATION

METER 4912279 - Multiplier x 1800 Read Dates: 07/21/15 - 08/17/15 (27 Days)

	DESCRIPTION	CURRENT READING	PREVIOUS READING	MEASURED USAGE	BILLED USAGE
1	Total Energy	2060 Actual	1876 Actual	184	331200 kWh
2	On Pk Energy	748 Actual	676 Actual	72	129600 kWh
3	Off Pk Energy	1312 Actual	1200 Actual	112	201600 kWh
4	Reactive Energy	366 Actual	329 Actual	37	66600 kVArh
5	Demand	Actual			684 kW
6	Billable Demand				810 kW
7	On Pk Demand	Actual			684 kW
8	Adjusted On Pk Demand				692 kW
9	Billable On Pk Demand				692 kW
10	Off Pk Demand	Actual			666 kW
11	Billable Off Pk Demand				666 kW
12	**Power Factor On Pk Demand**	**88.94%**			

193 Cooling Degree Days

ELECTRICITY CHARGES **RATE: Large TOD Service**

	DESCRIPTION	USAGE	UNITS	RATE	CHARGE
13	Customer Charge				$155.00
14	On-Peak Energy ChSumme	129600	kWh	$0.080899	$10,484.51
15	Off-Peak Energy CSummer	201600	kWh	$0.047657	$9,607.65
16	Energy Chg Cred	82080	kWh	- $0.010000	- $820.80 **CR**
17	Customer Demand	810	kW	$1.120000	$907.20
18	On-Peak Demand ChSumm	692	kW	$11.420000	$7,902.64
	Subtotal				**$28,236.20**
19	WI Low Income Assist				$140.00
	Total				**$28,376.20**

NON-RECURRING CHARGES / CREDITS DETAILS

	DESCRIPTION	CHARGE
20	Processing Charge [redacted]	$16.50
	Total	**$16.50**

Premises Total **$28,392.70**

DAILY AVERAGES	Last Year	This Year
Temperature	71° F	72° F
Electricity kWh	771.4	12266.7
Electricity Cost	$184.29	$1,051.58

Appendix C

Economic evaluation process

When determining whether an energy efficiency project will be cost effective, most municipalities will apply a simple payback (SPB) approach rather than a lifecycle cost (LCC) approach. Typically, the SPB method is appropriate for smaller projects involving equipment replacement and/or low up-front capital costs with low maintenance costs. However, for larger projects with significant up-front capital costs, multiple cost factors (e.g. maintenance, energy, replacement) and variations in annual cash flow, LCC analysis is more appropriate.

Simple payback

The SPB method calculates the amount of time it takes for the cumulative energy savings and other project benefits to break even the initial project investment. To calculate the SPB, divide the total project cost by the total expected benefit.

SPB (years) = Cost of project ($) / Annual savings ($ per year)

Example: A facility is evaluating to replace its motors with more efficient models. If the new motors cost $200,000 and are expected to reduce energy costs by $100,000 per year and last several years, the SPB is two years ($200,000 / $100,000/year = 2 years).

Life cycle cost

According to the U.S. Department of Energy (energy.gov), "Lifecycle cost analysis is the process of calculating whether a particular investment… will generate a positive return on investment (ROI) over the life of the technology."

A very simple LCC analysis[1] takes the value of a project's stream of benefits over the lifetime of the project and compares it directly with the project's initial capital cost. The stream of benefits is equal to the sum of the annual energy savings over the lifetime of the project. The LCC approach is used to compare the net value of one option against another. Options may include different energy-efficient choices and/or simply continuing to operate the existing equipment.

NPV = ∑(annual energy savings) – Initial investment

Where:

$$\sum(\text{annual energy savings}) = (\text{Energy use}_{base} - \text{energy use}_{efficient})\text{Year1} + (\text{Energy use}_{base} - \text{energy use}_{efficient})\text{Year2} \ldots$$

and:

Energy use_{base} = annual energy used by the base option

$\text{Energy use}_{efficient}$ = annual energy used by the energy efficient option

This analysis should be done for each option being considered. If other factors, which may include non-energy benefits and costs, are not sufficient to outweigh the net value of the highest value option, the option should be selected.

[1] For the sake of simplicity, the illustration does not include interest rates or discount rates to arrive at a better approximation of the net present value of a stream of discounted benefits or costs. Benefit and/or cost streams are assumed to be constant over time. A more complex and accurate LCC analysis would calculate the discounted benefits and costs over time to account for the time value of money, whether invested (as energy efficiency savings) or capitalized through loan payments for capital equipment. Additional factors influencing the operation of the technology – such as maintenance, service costs and materials – could also be quantified and included for a more accurate analysis.

Example

Assume a wastewater utility is considering replacing its worn-out aeration equipment with energy-efficient fine-bubble diffusers. Compare the utility's three options:

A: Replace equipment with equipment of the same efficiency as the existing (base)

Project cost	$350,000
Savings	0 kWh
Energy savings	$0/year
SPB $_{base}$	0 years
Net Value$_{base}$	[$0/year x 10 years] - [$350,000]
Net Value $_{base}$	- $350,000 (note this is a negative value, or a net cost)

B: Replace equipment with energy-efficient alternative

Project cost	$600,000
Savings	1,800,000 kWh
Energy savings	$90,000/year
Equipment life	10 years
SPB $_{Alt\ B}$	[$600,000 / $90,000] = 6.7 years
Net Value $_{Alt\ B}$	[$90,000/year x 10 years] - [$600,000]
Net Value $_{Alt\ B}$	$300,000

C: Replace existing equipment with the best practice energy-efficient alternative

Project cost	$750,000
Savings	2,100,000 kWh
Energy savings	$110,000/year
Equipment life	10 years
SPB $_{Alt\ B}$	[$750,000 / $110,000] = 6.8 years
Net Value $_{Alt\ B}$	[$110,000/year x 10 years] - [$750,000]
Net Value $_{Alt\ B}$	$350,000

Discussion

In the table below, Option A has a zero payback, but in the long term, it loses out to Options B and C, which provide a stream of benefits helping to pay for the entire project. While Option B has a shorter payback than Option C, the lifecycle cost benefits of Option C have a $50,000 advantage over Option B. For a measure with a projected lifetime of 10 years, Option C is the best choice because it has the highest LCC benefit.

OPTION	SPB	LCC	NET VALUE (FROM BASE A)
A	Base (0)	-$350,000	Aerated Lagoon
B	6.7 yrs	+$300,000	Aerated Lagoon
C	6.8 yrs	+$350,000	Aerated Lagoon

Net present value

The net present value (NPV) of an energy project or investment shows the degree to which savings equal or exceed the amount of investment needed to fund the energy project. When assessing multiple projects, NPV is a way to compare cash flow to ensure only the most lucrative ventures are pursued. A higher NPV means the project or investment is more cost effective. According to Wikipedia:

> *"The net present value (NPV) or net present worth (NPW) is defined as the sum of the present values (PVs) of incoming and outgoing cash flows over a period of time. Incoming and outgoing cash flows can also be described as benefit and cost cash flows, respectively .... NPV is determined by calculating the costs (negative cash flows) and benefits (positive cash flows) for each period of an investment."*

For the sake of illustration, the following NPV table shows the stream of benefits for Option C, assuming 4% APR on a 10-year bond to capitalize $750,000 for the project. Annual payments are $92,468 (Column A).

Annual energy savings have been discounted by 1% per year (Column C). In this example, note the NPV, by year shows a positive cash flow, i.e. the energy savings always exceed the loan payments. Over the 10-year expected life of the equipment, the cumulative net benefits are $79,000, compared with making no changes to the facility. Always consult your accountant or bank when conducting this type of analysis. Your estimates of energy savings should rely on sound engineering expertise.

YEAR	A ANNUAL LOAN PAYMENTS	B CUMULATIVE LOAN PAYMENTS	C DISCOUNTED ENERGY SAVINGS	D CUMULATIVE PRESENT VALUE OF ENERGY SAVINGS	E NET PRESENT VALUE BY YEAR (C – A)	F CUMULATIVE NET PRESENT VALUE
0	0	0	0	0	0	0
1	92,468	92,468	110,000	110,000	17,532	17,532
2	92,468	184,936	108,900	218,900	16,432	33,964
3	92,468	277,404	107,811	326,711	15,343	49,307
4	92,468	369,872	106,733	433,444	14,265	63,572
5	92,468	462,340	105,666	539,109	13,198	76,769
6	92,468	554,808	104,609	643,718	12,141	88,910
7	92,468	647,276	103,563	747,281	11,095	100,005
8	92,468	739,744	102,527	849,808	10,059	110,064
9	92,468	832,212	101,502	951,310	9,034	119,098
10	92,468	924,680	100,487	1,051,797	8,019	127,117

Additional references

The United States Environmental Protection Agency ENERGY STAR Tools and Resources Library provides links to various Financial Evaluation Tools, including a Cash Flow Opportunity Calculator (a Microsoft Excel – based tool) to help decision-makers evaluate the benefits of installing energy-efficient equipment.

- https://www.energystar.gov/buildings/tools-and-resources

The United States Department of Energy's Federal Energy Management Program (FEMP) offers many resources to assist with Life-Cycle Cost Analysis, including FEMP's Building Life-Cycle Cost Software, training opportunities and a Life Cycle Costing Manual.

Additional resources can be found on the following websites:

- http://simple.werf.org/simple/media/LCCT/examples.html
- http://www.gsa.gov/portal/content/101197

Appendix D

Small utility energy management checklists

This appendix includes two checklists, one for water-utility systems and the other for wastewater-utility systems, which are smaller than the average utility. The checklists are intended to provide an easy way for a system operator to gather the important data needed to develop an energy plan to manage energy costs. Each checklist is accompanied by a Checklist Guidance section to assist in the completion of the checklists. Each checklist can be completed and submitted to Focus on Energy for additional support in implementing energy projects.

The Focus on Energy checklists were modified from the original checklists developed in coordination with the Consortium for Energy Efficiency (CEE), using the CEE templates as the basis.

Small drinking water treatment facility energy efficiency opportunity checklist

How to use this checklist

Energy costs are a significant and growing burden on operating budgets at small treatment facilities nationwide. This energy use is typically concentrated in the pumping and disinfection systems. Use this Checklist to highlight potential energy savings at your facility, then contact the Focus on Energy Program with your results to learn how your facility can start saving energy and money.

Disclaimer

This checklist is an informational tool. Submitting to Focus on Energy entails no commitment on the part of yourself or your facility to make process or operations changes. Consult with a Professional Engineer prior to making process changes impacting drinking water quality or public health.

1. Treatment and distribution information

Please provide plant-flow rates for all water sources at design, peak and winter average conditions.

	WELLS	PUMPED SURFACE WATER	GRAVITY SURFACED WATER
Design			
Peak			
Winter average			

TREATMENT PROCESS	SLOW SAND	PACKAGE FILTRATION	MIXED MEDIA	MEMBRANE FILTRATION	OTHER
Check all that apply					

Provide information on pump use within your system by pump type (well, raw/finished water pumps, booster pumps, backwash pumps). For each type, provide total pump horsepower, horsepower usually operating, annual hours of use, and method used to control pump output, if any (e.g. recirculation, throttling, variable speed drive).

PUMP USE WITHIN YOUR SYSTEM	HP TOTAL	HP OPERATING	ANNUAL HOURS	CONTROL
Raw water				
Finished water				
Booster				
Backwash				
Well #1				
Well #2				
Well #3				

2. Pumping information

	YES	NO	COMMENTS
Are any of the listed pumps not operating at their design flow and head?	☐	☐	
If any of the listed pumps are throttled, how much are they throttled?	☐	☐	
Are any of the listed pumps not operating at their design flow and head?	☐	☐	
Do you pump from a well to an at-grade reservoir and then pump again to a tower?	☐	☐	
Are your finished water pumps operated mainly during off-peak electric hours?	☐	☐	

3. Treatment process

	YES	NO	COMMENTS
Do you use membrane or pressure filtration?	☐	☐	
Do you use backwash pumps?	☐	☐	
Do you use an ultraviolet (UV) disinfection system?	☐	☐	
If yes, does the UV system use low-pressure, high-output lamps?	☐	☐	
Do you use reverse osmosis for treatment?	☐	☐	
Do you use centrifuges for dewatering residuals?	☐	☐	

4. Booster pumping – reservoir to reservoir

	YES	NO	COMMENTS
Do you have booster-pumping stations to move water from one reservoir to another? (Include # of stations, # of pumps and total hp at each station.)	☐	☐	
If yes, are any of these pumps not operating at their design flow and head?	☐	☐	
Are any of these pumps throttled to adjust flow rate?	☐	☐	
Do these pumps have variable speed control? If yes, please explain.	☐	☐	

5. Booster pumping – reservoir to closed system

	YES	NO	COMMENTS
Do you have booster-pumping stations moving water from one storage reservoir to a pressure zone without a storage reservoir? (Include # of stations, # of pumps and total hp.)	☐	☐	
If yes, are any of these pumps allowed to run continuously without controls?	☐	☐	

	YES	NO	COMMENTS
Are any of these pumps throttled to adjust flow rate?	☐	☐	
Do any of these pumps have variable speed control?	☐	☐	
Are any of these pumps sized to meet maximum daily flow (vs. avg. day flow)?	☐	☐	
In your distribution system, do any pressure zones operate at pressures greater than 65 psi? (Please provide operating pressure and reason necessary.)	☐	☐	

6. Other

	YES	NO	COMMENTS
Has your plan undergone any energy improvement projects in the past five years?	☐	☐	
Is or will your plant be undergoing renovation to comply with permitting requirements or meet capacity needs?	☐	☐	
If yes, are energy conservation measures included as part of this renovation?	☐	☐	
Do you have a backup generator capable of powering your facility?	☐	☐	
Do you have a computer model of your distribution system?	☐	☐	
Does your system have elevated storage?	☐	☐	
Does your system have pressure relief valves to transfer water between pressure zones?	☐	☐	
In which WDNR District are you located?			

Contact information

Your name:			
Facility name:			
Facility address:			
Email address:		Phone number:	

Do you have any ideas or plans which could improve the energy efficiency of your system?

Small drinking water treatment facility energy efficiency opportunity checklist guidance

The guidance below corresponds to a question or questions on the Water Checklist. This information provides insights into possible energy-saving opportunities and identifies the information program staff should collect.

General system information

- System information is provided as a diagnostic overview to provide program staff with an overall view of the system. The answers to the checklist are not intended to indicate energy-savings opportunities, but to inform program staff as to the likely size or prevalence of an energy efficiency opportunity.

In-plant pumping

- 2B. An answer noting a pump is not operating at its design flow and head is an indication of some degree of an energy-savings opportunity. Follow-up should determine how far off of design flow and head the pump is operating, the reason why the pump is operating off its design point, and how many and how large are the pumps for which this is the operating condition.
- 2C. An answer noting a pump is throttled indicates a likely energy-savings opportunity. The size and number of those pumps are critical variables in determining the achievable savings.
- 2D. Variable speed drives (VSDs) may yield energy savings on raw and finished water pumps. Identify whether pumping loads are constant or variable, and whether greater savings might be achieved through right-sizing pumps to meet average and peak pumping demands.
- 2I. If finished water pumps are not operated mainly during off-peak hours, this may indicate an opportunity for load shifting. Not using existing in-system storage may indicate a similar opportunity. Determine if storage exists and if it is being used effectively.

Treatment process

- 3A. Membrane filtration is the most energy-intensive commonly found water-treatment process type because pumping is required to move water through the membrane and blower air is required to clean the membrane.
- 3B. Backwash pumps may present opportunities for energy savings if they are throttled during backwash operation. Determine if a VSD is warranted by estimating percent throttling and the total backwash pump operating hours per year.

Booster pumping-reservoir to reservoir

- 4B. See “In-Plant Pumping”, above, for operational control.
- 4D. Pumping with VSDs from reservoir to reservoir is less energy efficient than pumping at full speed if the pump’s most efficient operating point. Assess if whether the VSDs can be removed or if pump combinations operating at their most efficient points on the curve can be selected via automatic controls for meeting average- and peak-flow conditions.

Booster pumping-reservoir to closed system

- 5B. Operating a pump continuously without controls wastes energy as the pump moves up and down its performance curve to meet changing pressure and flow demands. For pumping from Reservoir to Closed System, a VSD controlled by pressure setting is the most efficient method, provided multiple pumps sized individually for average demand and in combination to meet peak demand are provided. Investigate the value of installing VSD control.
- 5E. Pumps sized to meet maximum flow will be oversized for average flows. Determine if the facility should have smaller pumps sized to handle average flows.
- The presence of a backup generator may indicate a demand-management opportunity. Determine if any programs or energy-utility services are available able to enable peak-saving opportunities.

Small wastewater energy efficiency opportunity checklist

How to use this checklist

Energy costs can be up to 40% of operating budgets at small treatment facilities (WEF 2009), but many facilities could save 20 to 40% of the energy they are using through energy efficiency. Use this checklist to identify potential energy savings at your facility. Contact Focus on Energy with your results to learn how your facility can start saving energy and money, and what incentives and resources Focus on Energy has to offer.

Disclaimer

This checklist is an informational tool. Submitting the completed checklist to Focus on Energy entails no commitment on the part of yourself or your facility to make process or operations changes. Consult with a Professional Engineer prior to making process changes impacting effluent quality. This checklist was developed by CEE with help from engineering professionals.

1. Biological process: activated sludge/aerated lagoons

1. FACILITY IN GENERAL	PRIMARY	SECONDARY	TERTIARY	NUTRIENT REMOVAL
Which process types does your facility employ (check all that apply)?	☐	☐	☐	☐
Which solids-processing types does your facility employ (check all that apply)?	☐	☐	☐	☐

	DESIGN	CURRENT
Please provide your average day design and current flow rates.	MGD	MGD
Please provide your average day design and current organic loading.	lbs. BOD/day	lbs. BOD/day

	COMMENTS
What is your current electric usage?	kWh/yr
If using blowers, what type and size (hp) of blowers do you use?	

	YES	NO
Are most of your motors NEMA Premium® efficiency?	☐	☐
Do you receive and review the facility's monthly electric and gas bills?	☐	☐

2. Influent and effluent pumping

	YES	NO	COMMENTS
Do you have on-site influent or effluent pumps?	☐	☐	
If yes, do you have variable speed control on these pumps?	☐	☐	
Are any of these pumps not operating at design-flow head?	☐	☐	

3. Pre- and post-aeration

	YES	NO	COMMENTS
Do you utilize aeration blowers for pre- or post-aeration, or other aeration uses?	☐	☐	
If yes, are there currently means to adjust the amount of air delivered to each use (describe in box to right)?	☐	☐	

4. Intermediate pumping

	YES	NO	COMMENTS
Do you have intermediate pumps to convey flow from primary to secondary processes, or from secondary- to tertiary-treatment processes?	☐	☐	
If yes, do you have variable speed control on these pumps?	☐	☐	
Are any of these pumps not operating at design-flow head?	☐	☐	

5. Biological process: activated sludge/aerated lagoons

	YES	NO	COMMENTS
Does your facility use mechanical aerators?	☐	☐	
If yes, do the aerators have variable speed control?	☐	☐	
Are the aerators controlled by a timer?	☐	☐	
Do you utilize aeration blowers as part of the activated-sludge process?	☐	☐	
Is the DO level in any of your aeration basins >2.0? If yes, please explain.	☐	☐	
Is your aeration system automatically controlled via DO levels and/or pressure differentials?	☐	☐	
If yes, are DO sensors located within each aeration basin?	☐	☐	
Do you currently use a fine-bubble aeration system?	☐	☐	
Do you have means of detecting diffuser fouling (please describe in box to the right)?	☐	☐	
Do you currently have variable speed RAS pumps?	☐	☐	
Do you currently have variable speed WAS pumps?	☐	☐	

6. Biological process: fixed film (RBCS or trickling filters)

	YES	NO	COMMENTS
Does your facility use supplemental aeration blowers as part of a fixed-film process?	☐	☐	
If yes, are there currently means to automatically adjust the amount of air delivered?	☐	☐	
Do you utilize pumps to convey flow to the trickling filters?	☐	☐	
If yes, do you have variable speed control on these pumps?	☐	☐	
Are your trickling-filter distribution arms mechanically driven?	☐	☐	

7. Disinfection

	YES	NO	COMMENTS
Do you currently use an ultraviolet (UV) disinfection system?	☐	☐	
If yes, does the UV system utilize low-pressure, high-output lamps?	☐	☐	
Is the system currently operated via flow pacing and/or dosing setpoint based on water quality?	☐	☐	

8. Sludge pumping

	YES	NO	COMMENTS
Does your facility process sludge less than 24 hrs/day?	☐	☐	
Does your sludge-handling process have equalization capacity?	☐	☐	
If not, do you have variable speed capability on your sludge-transfer pumps?	☐	☐	
Are any of these pumps not operating at design flow and head?	☐	☐	

9. Sludge stabilization

	YES	NO	COMMENTS
Does your facility utilize aerobic digestion?	☐	☐	
If yes, has there been consideration of anaerobic digestion?	☐	☐	
Do you currently have the capability to produce biogas from anaerobic-digestion processes?	☐	☐	
If yes, do you practice beneficial reuse of biogas (for process heat, building heat, electric generation)?	☐	☐	

10. Sludge thickening and dewatering

	YES	NO	COMMENTS
Does your thickening/dewatering equipment run less than 24 hrs/ day?	☐	☐	
Do you use centrifuges for thickening, dewatering or both?	☐	☐	
Do you use sludge-drying beds for dewatering?	☐	☐	
Do you haul sludge to another location for processing?	☐	☐	
Do you use incineration for sludge stabilization/disposal?	☐	☐	

11. Other

	YES	NO	COMMENTS
Has your facility undergone any energy-improvement projects in the past five years?	☐	☐	
Is or will your facility be undergoing renovation to comply with permitting requirements or meet capacity needs?	☐	☐	
If yes, are energy-conservation measures included as part of this renovation?	☐	☐	
Do you have a backup generator capable of powering your facility?	☐	☐	

Contact information

Your name:			
Facility name:			
Facility address:			
Email address:		Phone number:	
Do you have any ideas or plans which could improve the energy efficiency of your system?			

Small wastewater energy efficiency opportunity checklist guidance

The guidance below corresponds to a question or questions on the Small Wastewater Energy Efficiency Opportunity Checklist. This information provides insight to systems and savings opportunities and identifies information program staff should obtain. The relative size of a given energy-savings opportunity is provided for each measure discussed below, on a range from 1 (small) to 3 (significant). The order of questions in the checklist corresponds to the order of treatment processes at a typical facility.

General system information

- System information is provided as a diagnostic overview. The answers on the checklist are not intended to indicate energy-savings opportunities (except for 1F Blower Type & Size), but rather to inform Focus on Energy staff as to the likely size or prevalence of an opportunity. An Energy Advisor will review and assess the information provided and Small Wastewater Energy Efficiency Opportunity Checklist Guidance utilize the results to identify opportunities.
- 1E. Blower type and size have energy efficiency implications. High-speed gearless blowers may offer energy savings if used to replace positive displacement or multistage centrifugal equipment. Blower selection and sizing is complex and must be matched to loading and conditions and should involve consultation with a process engineer (3).

Pre- and post-aeration

- 3A. Pre-, post- and channel aeration may provide opportunities to reduce blower energy consumption. Aerated channels typically require air at 2-4 PSI vs. 9-12 PSI for aeration basins. Aerated channels drawing air from the primary aeration blowers present a savings opportunity. Follow-up should determine if pre- or post-aeration and aerated channels are necessary and if they can be operated periodically and not continuously. In addition, determine if aerated channels draw from a dedicated blower at lower pressure. If they draw from the aeration blower, an energy efficiency opportunity exists (2).

Biological process-activated sludge

- 5A. Mechanical aeration is usually less efficient than blowers and fine-bubble diffusers. Equipment replacement may offer significant savings. Equipment refurbishment, typically involving trimming or redesign of the aerator impeller, can also yield significant energy savings, though not as great as from switching to diffused aeration (3).
- 5B. Variable speed control may offer significant savings for mechanically aerated systems. Follow-up should identify the total hp size of the mechanical aerators and the current dissolved oxygen setpoint for the system (2).
- 5C. Timer control may offer significant savings if a mechanically aerated system is without variable speed control. Follow-up should determine if the system operates continually without control, and quantify total aeration process energy consumption, or horsepower, and the operating hours per year of each mechanical aerator (3).

- 5E. Automatic Dissolved Oxygen (DO) setpoint control using variable speed drives may provide significant energy savings for aeration-blower systems currently operating without automatic controls. Follow-up should obtain blower-performance curves and motor sizes to determine the range of efficient operation the blower can provide. Further review should verify what the operating DO levels are and how they are controlled (3).
- 5G. DO concentration should be measured and controlled in each aeration basin to assure efficient blower-air distribution and use. A DO level greater than 2.0 ppm indicates over-aeration and an opportunity to reduce blower-energy consumption. Follow-up should determine location of DO probes in the aeration tank(s) used for control and suggest a reduction below 2.0 ppm. Blower turndown presents an immediate and inexpensive energy management opportunity (2).
- 5I. Fine-bubble diffusers can foul in a matter of months and significantly reduce system efficiency. Regular detection and prevention of diffuser fouling is a common low-cost energy-savings opportunity. Follow-up should include regular diffuser cleaning and maintenance as an immediate near-term energy-savings opportunity. Note ceramic diffusers are more prone to fouling than flexible membrane diffusers and typically require more frequent cleaning (2).

Biological process-fixed film

- 6A-B. Supplemental aeration or drive blowers provide an opportunity to control the weight of the biological growth on the fixed media discs being rotated. Automatic weight-setpoint control reduces energy waste by activating additional aeration to shear the excess biological growth when it becomes too heavy (2).
- 6C. Test the efficiency of pumps key to determine if replacement with more efficient units is warranted (2).
- 6E. Trickling-filter distribution arms typically operate 8,670 hours per year. In such situations, premium efficiency motors can provide a significant savings opportunity (with short payback) when replacing standard efficiency equipment. Additionally, if loads are intermittent, there may be an opportunity to reduce recycle pumping used to keep the trickling filter wet. Follow-up should determine whether trickling filter loading is constant or variable, and whether there is an opportunity to upgrade distribution-arm motor efficiency or retrofit from hydraulic-driven arms to motor-driven arms (2).

Disinfection

- 7B. Low-pressure, high-output lamps offer savings over standard UV lamps. The amount of savings will vary with the number of lamps and operating hours. Follow-up should determine lamp type and operating hours in order to estimate savings potential (2).
- 7C. Controlling UV dosage via flow pacing or turbidity can offer savings over continuous high-dose operation. In order to assess the impact of improved controls, follow-up should establish how the system is controlled and the average UV system run times (2).

Sludge stabilization

- 9A. Aerobic digestion may present an opportunity to convert to facultative digestion through reduced aeration regulated by ORP (oxidation reduction potential) or to anaerobic digestion with biogas reuse. Review and assess the feasibility of process changes (3).
- 9C. A facility employing anaerobic digestion but does not reuse the biogas likely presents a significant energy savings or renewable energy generation opportunity. Assess the quantity and quality of the biogas produced and whether previous attempts at beneficial reuse have been made (3).

Sludge thickening and dewatering

- 10B. Replacing centrifuges used for thickening/dewatering with gravity-belt press or other equipment may offer significant energy savings. Determine total solids processed per day and energy consumed by the system (2).
- 10E. Incineration may provide an opportunity for heat recovery and energy production. Determine the feasibility and estimate the cost savings (sludge removal) and energy-generation potential of incineration (2).

Rural water/wastewater best practices

Low- and no-cost opportunities

The opportunities listed usually involve a change in operation or adjust the time when required operation or maintenance should be scheduled at a facility.

Optimize nozzles used in spray irrigation disposal systems

Check the size of spray nozzle on the irrigation system to make sure it is the most energy-efficient size for your application. This will save energy particularly if the nozzle is too small. If the nozzle is too small, it is creating too high a backpressure and adversely impacting your energy use by creating unnecessary backpressure on the pump.

Optimize seasonally stored effluent

For plants with seasonally stored effluent be sure to optimize effluent discharge to take advantage of pump best efficiency points and off-peak electric rates. Using energy during off-peak times can save money. Additionally, if you must discharge stored effluent during peak utility rate periods, try to reduce the flow rate during peak times. To maintain pump efficiency at variable flow, this strategy may require a variable frequency drive (VFD) addition to your effluent disposal pump.

Consider modern blower enclosures when purchasing new blowers

Modern weather and soundproof blower enclosures are less expensive than new buildings and allow the blower to be placed closer to the process needing the air, reducing the static head loss in the air main.

Upgrade to three-phase power to take advantage of variable speed drive technology

Compared to throttling to control flow from centrifugal pumps, variable speed drives (VSDs) can save a tremendous amount of energy, however, they require three-phase power. Check with your electric provider or pump vendor to see if upgrading to three-phase power is viable because utilizing VSD technology on your variable-flow pumps could save you energy and money.

Replace air-lift pumps with electric-motor-driven pumps

It is tempting to use air-lift pumps because you already have a supply of air on-site. However, air is a very inefficient form of power because you incur efficiency penalties at the compression of the air. Check with your preferred vendor to discuss replacing any air-lift pumps with electric-motor-driven pumps.

Avoid expanding collection systems to sites able to utilize on-site disposal

On-site disposal systems should be included as an alternative when evaluating sanitary-waste treatment alternatives, particularly in rural areas where the operation of a wastewater collection and treatment system may become a large energy user in the service area. Review the soil characteristics of the service area to be serviced with sewers to assess if soil conditions exist supporting a reliable and code-complying on-site disposal system. Energy will be saved if on-site systems are applicable because a collection and treatment system would not be required.

Evaluate all throttled pumps for vsd suitability

Assess well-pump operation to learn if the pumping rate or well drawdown is being controlled by throttling the discharge side of the pump. Many well-water and water-system booster pumps are controlled by throttling a valve on the discharge side of a pump. This mode of operation is not uncommon and, at times, necessary because it is the only way to safely supply water to the distribution system. However, throttling control usually results in using more energy than needed and exerts unnecessary wear and tear on the equipment. Assess the utilization of VSDs on the well pumps. Energy will be saved if it is shown VSDs are applicable and can be utilized to control the speed of the pump rather than throttling the pump, which controls it by placing unnecessary head conditions on the discharge side, resulting in additional energy to be used when compared to controlling the pump speed.

Consider rehabilitating older wells with declining production and recharge

Assess the operational parameters, principally drawdown and recharge, of your water-supply well to identify if its production rate has decreased and its recharge capability declined. If this is the situation, well rehabilitation should be assessed to identify if the well can be rehabilitated back to its original condition. Rehabilitating your well will save energy by reducing static lift and minimizing the cone of depression through restored well recharge rates.

The earlier Appendices located in this Energy Best Practices Guide are of specific value to smaller customers. They provide specific instructions and guidance in: developing an energy baseline (Appendix A – Baseline energy use and Key Performance Indicators [KPI]), reading and understanding your electric bill (Appendix B – Understanding your electric bill), and developing an economic evaluation to select equipment based on lifecycle cost analysis (Appendix C – Economic evaluation process).

Appendix E

Additional resources

Top low-cost and no-cost saving opportunities

1. Meet with your electric supplier to evaluate your current rate schedule and identify the most efficient rate for your facility.
2. Contact your electric supplier to review your energy rate schedule and identify on-peak hours to better manage your demand.
   - Review your operations during on-peak hours to identify idle operation of non-essential equipment.
   - Determine if a portion of your treatment process(es) can be adjusted to operate during off-peak hours. Examples Include:
     a. Operate thickening or dewatering equipment during off-peak hours.
     b. Shift recycling of supernatant to off-peak hours.
     c. Load digesters during off-peak hours.
     d. Operate mixers or aerators in aerobic digesters during off-peak hours.
     e. Accept or treat hauled-in wastes during off-peak hours. Utilize storage, if applicable.
     f. Shift filter backwash cycles to off-peak hours.
     g. Bump diffusers to off-peak hours or not at all, if practical.
     h. Test repaired equipment during off-peak hours.
     i. Change lead-lag equipment operation during off-peak hours.
     j. Do not mix solids holding tanks during on-peak hours.
3. Maintain pumps and blowers; inspect, lubricate, and replace seals and bearings; check belt tension and alignment and adjust for optimal operation per manufacturers recommendations.
4. Turn off aerobic digester blower periodically or operate intermittently (i.e. 2 hours on / 4 hours off; repeat).
5. Modify the dissolved oxygen (DO) level in the aeration tank(s).
6. Operate select aeration tanks as needed.
7. Change intake filters for aeration blowers regularly to provide minimum resistance for intake air.
8. Identify, assess and repair aeration system air main leaks.
9. Identify and repair compressed air leaks.
10. Identify equipment speeds and re-sheave blowers to gain efficiencies.

11. Turn off unnecessary lighting and install occupancy sensors.
12. Idle aeration basins or zones seasonally, if not needed.
13. Adjust system operations when there is a change in wastewater load.
14. Raise wet-well levels to reduce static head in the pump system.
15. Lower aeration tank levels to reduce air header static pressure.
16. Shift nightly low-flow periods or seasonal low-flow periods to smaller HP pumps / blowers, if applicable.
17. Operate minimum number of UV lamps as possible while still meeting disinfection needs if applicable.
18. Regularly clean UV lamp sleeves to improve transfer efficiency.
19. Test and calibrate / replace DO sensors if needed.
20. Identify the best location to install DO probes in the aeration tanks.
21. Install programmable thermostats and utilize night set back / set up settings.
22. Assess the potential for organics removal prior to entering the secondary treatment system. Assess the capability for high organic dischargers to feed loadings directly to a digester.
23. Review your operations to identify if any pumps or blowers are being throttled. If throttled pumps and blowers are identified, review to determine if they can be unthrottled to operate more efficiently.
24. Idle any unnecessary equipment.

Publications

- *American Water Works Association – Energy Management for Water Utilities,* American Water Works Association, 2016.
- *Electricity Use and Management in the Municipal Water Supply and Wastewater Industries 3002001433*, Electric Power Research Institute, November 2013.
- *Ensuring a Sustainable Future: An Energy Management Guidebook for Wastewater and Water Utilities*, U.S. Environmental Protection Agency, 2008.
- *The Wastewater Treatment Plant Pumps: Guidelines for Selection, Application, and Operation Guidebook*, Hydraulic Institute, 2015.
- *Water Environment Federation Manual of Practice No. 32 – Energy Conservation in Water and Wastewater Treatment Facilities*, Water Environment Federation, 2009.
- *Water Environment Research Federation – The Energy Roadmap: A Water and Wastewater Utility Guide to More Sustainable Energy Management*, Water Environment Research Foundation, 2013.

Websites

- American Council for an Energy-Efficient Economy (ACEEE) – http://aceee.org/
- American Society of Heating, Refrigerating and Air-Conditioning Engineers (ASHRAE) – http://www.ashrae.org
- American Water Works Association – http://www.awwa.org/
- Electric Power Research Institute – http://www.epri.com/Pages/Default.aspx
- Hydraulic Institute/Pump Systems Matter – http://www.pumps.org/
- For NYSERDA wastewater-efficiency resources, go to www.nyserda.ny.gov and, in the search bar at the top of the web page, enter “Wastewater Energy Efficiency".
- U.S. Environmental Protection Agency’s ENERGY STAR® Portfolio Manager Platform – https://www.energystar.gov/buildings/facility-owners-and-managers/existing-buildings/use-portfolio-manager
- U.S. Green Building Council – http://www.usgbc.org
- Water Research Foundation – http://www.werf.org/
- Wisconsin Department of Natural Resources – Operator Certification – http://dnr.wi.gov/regulations/opcert/
- Wisconsin Department of Natural Resources – Wastewater – http://dnr.wi.gov/topic/wastewater/
- Wisconsin Department of Natural Resources – Water – http://dnr.wi.gov/topic/drinkingwater/

Organizations

- Wisconsin Wastewater Operators’ Association (WWOA) – https://www.wwoa.org/
- Wisconsin Rural Water Association (WRWA) – http://www.wrwa.org/
- Environmental Protection Agency Region 5 (EPA) – http://www2.epa.gov/aboutepa/epa-region-5
- Wisconsin Water Association (WWA) – http://www.wiawwa.org/
- Wisconsin Focus on Energy – https://focusonenergy.com/

REDUCING ENERGY WASTE ACROSS WISCONSIN

FOCUS ON ENERGY®, Wisconsin utilities' statewide program for energy efficiency and renewable energy, helps eligible residents and businesses save energy and money while protecting the environment. Focus on Energy information, resources, and financial incentives help to implement energy efficiency and renewable energy projects that otherwise would not be completed.

©2024 Wisconsin Focus on Energy 067-0143-12-00

focus on energy®

Partnering with Wisconsin utilities